READ THIS FIRST

Model W1742/W1742S
IMPORTANT UPDATE
Applies to Models Mfd. Since 09/17
and Owner's Manuals Printed 01/06

Phone #: (360) 734-3482 • Tech Support: techsupport@woodstockint.com • Web: www.woodstockint.com

We made the following change to these machines since the owner's manuals were printed:

- Changed outfeed roller from serrated steel to rubber.

Aside from the information contained in this update, all other content in the owner's manual is applicable and MUST be read and understood for your own safety.

IMPORTANT: Keep this update with the owner's manual for future reference. If you have any further questions, contact our Technical Support.

V2 Outfeed Roller

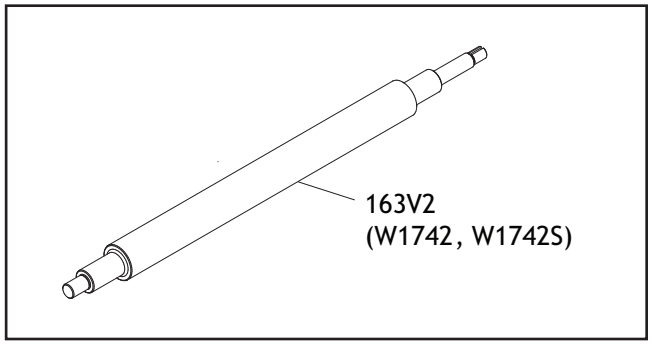

V1 & V2 Outfeed Roller Photos

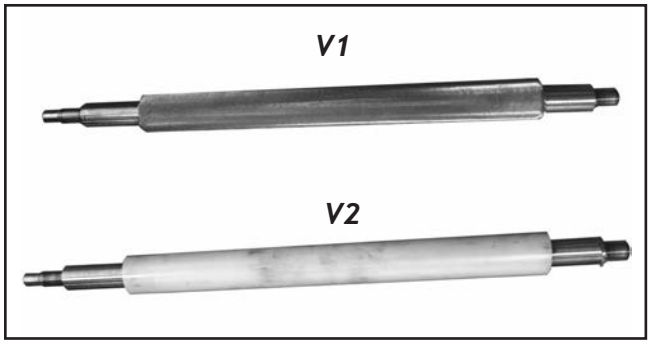

REF	PART #	DESCRIPTION
163V2	X1742163V2	OUTFEED ROLLER (RUBBER) V2.09.17 (W1742)
163V2	X1742S163V2	OUTFEED ROLLER (RUBBER) V2.09.17 (W1742S)

COPYRIGHT © AUGUST, 2017 BY WOODSTOCK INTERNATIONAL, INC.
WARNING: NO PORTION OF THIS MANUAL MAY BE REPRODUCED IN ANY SHAPE OR FORM WITHOUT
THE WRITTEN APPROVAL OF WOODSTOCK INTERNATIONAL, INC.
#19143BL Printed in China

READ THIS FIRST

Model W1742S
IMPORTANT UPDATE
Applies to Models Mfd. Since 04/15
and Manual Insert Revised 09/10

Phone #: (360) 734-3482 • Tech Support: tech-support@shopfox.biz • Web: www.shopfox.biz

We made the following changes to this machine since the manual insert was printed:

- Changed spiral cutterhead and indexable inserts.

Aside from the information contained in this update, all other content in the owner's manual is applicable and MUST be read and understood for your own safety.

IMPORTANT: Keep this update with the owner's manual for future reference. If you have any further questions, contact our Technical Support.

Revised Parts

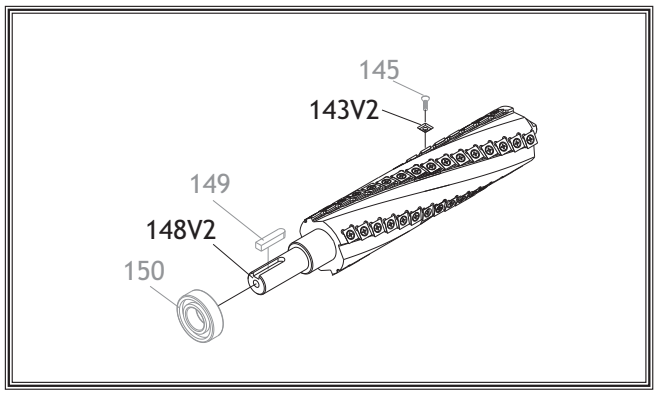

REF	PART #	DESCRIPTION
143V2	X1742S143V2	INDEXABLE INSERT 14 X 14 X 2 V2.04.15
148V2	X1742S148V2	SPIRAL CUTTERHEAD V2.04.15

COPYRIGHT © SEPTEMBER, 2015 BY WOODSTOCK INTERNATIONAL, INC.
WARNING: NO PORTION OF THIS MANUAL MAY BE REPRODUCED IN ANY SHAPE OR FORM WITHOUT
THE WRITTEN APPROVAL OF WOODSTOCK INTERNATIONAL, INC.
#17659BL Printed in China

READ THIS FIRST

Model W1742/W1742S
IMPORTANT UPDATE
Applies to Models Mfg. Since 7/12
and Owner's Manual January, 2006

Phone #: (360) 734-3482 • Tech Support: tech-support@shopfox.biz • Web: www.shopfox.biz

The following changes were recently made to these machines since the owner's manual was printed:

- Now certified to meet CSA 22.2 #71.2-10 and UL 987-7th standards.
- Changed the motor nominal voltage from 220V to 240V and added a power cord with a plug.

This document provides relevant updates to portions of the owner's manual that no longer apply and additional information required by CSA—aside from this information, all other content in the owner's manual applies and MUST be read and understood for your own safety. **IMPORTANT: Keep this update with the owner's manual for future reference**. *If you have any further questions, contact our Technical Support.*

Changed Specifications

Electrical

Power Requirement .....240V, Single-Phase, 60 Hz

Motor

Voltage 240V

Amps..... 15A

Operation Info

Cutterhead Speed ..... 4800 RPM

New/Revised Parts

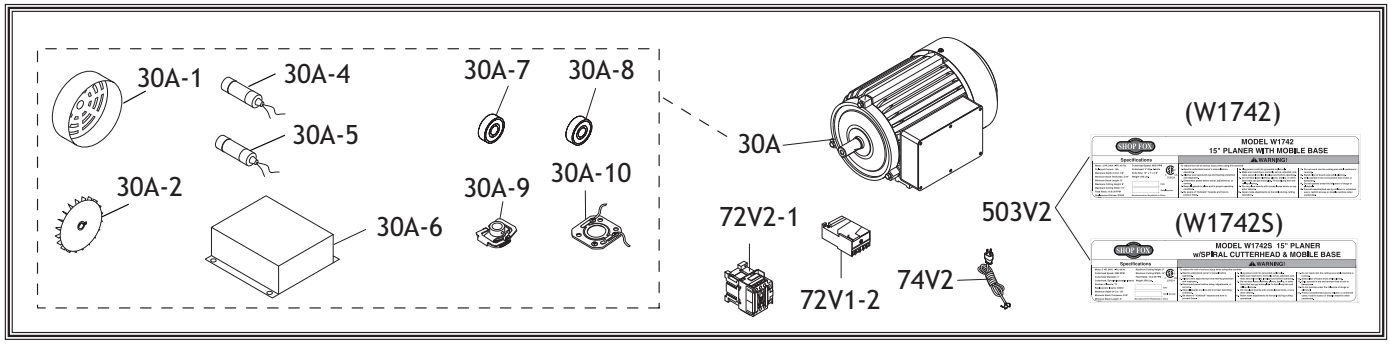

REF	PART #	DESCRIPTION
30A	X1742030A	MOTOR 3HP 240V 1-PH V2.03.08
30A-1	X1742030A-1	MOTOR FAN COVER V2.03.08
30A-2	X1742030A-2	MOTOR FAN V2.03.08
30A-4	X1742030A-4	R CAPACITOR 20M 400V
30A-5	X1742030A-5	S CAPACITOR 200M 250V 3-7/8 X 1-1/2
30A-6	X1742030-6	MOTOR JUNCTION BOX
30A-7	XP6204ZZ	BALL BEARING 6204ZZ
30A-8	XP6203ZZ	BALL BEARING 6203ZZ

REF	PART #	DESCRIPTION
30A-9	X1742030A-9	CENTRIFUGAL SWITCH 16MM 3450
30A-10	X1742030A-10	CONTACT PLATE 16MM
72V2-1	X1741035-2	CONTACTOR NHD C-09D 230V
72V1-2	X1742072V2-2	OL RELAY NHD NTH-21 17-21A
74V2	X1742074V2	PWR CORD 12G 3W 72" 6-20P V2.07.12
503V2	X1742503V2	ID LABEL CSA V2.07.12 (W1742)
503V2	X1742S503V2	ID LABEL CSA V2.07.12 (W1742S)

C US 208624

COPYRIGHT © AUGUST, 2012 BY WOODSTOCK INTERNATIONAL, INC.
WARNING: NO PORTION OF THIS MANUAL MAY BE REPRODUCED IN ANY SHAPE OR FORM WITHOUT
THE WRITTEN APPROVAL OF WOODSTOCK INTERNATIONAL, INC. #15241BLTS Printed in China

SAFETY

For Your Own Safety, Read Manual Before Operating Machine

The purpose of safety symbols is to attract your attention to possible hazardous conditions. This manual uses a series of symbols and signal words intended to convey the level of importance of the safety messages. The progression of symbols is described below. Remember that safety messages by themselves do not eliminate danger and are not a substitute for proper accident prevention measures—this responsibility is ultimately up to the operator!

⚠DANGER **Indicates an imminently hazardous situation which, if not avoided, WILL result in death or serious injury.**

⚠WARNING **Indicates a potentially hazardous situation which, if not avoided, COULD result in death or serious injury.**

⚠CAUTION **Indicates a potentially hazardous situation which, if not avoided, MAY result in minor or moderate injury.**

NOTICE **This symbol is used to alert the user to useful information about proper operation of the equipment or a situation that may cause damage to the machinery.**

Standard Machinery Safety Instructions

OWNER'S MANUAL. Read and understand this owner's manual BEFORE using machine.

TRAINED OPERATORS ONLY. Untrained operators have a higher risk of being hurt or killed. Only allow trained/supervised people to use this machine. When machine is not being used, disconnect power, remove switch keys, or lock-out machine to prevent unauthorized use—especially around children. Make workshop kid proof!

DANGEROUS ENVIRONMENTS. Do not use machinery in areas that are wet, cluttered, or have poor lighting. Operating machinery in these areas greatly increases the risk of accidents and injury.

MENTAL ALERTNESS REQUIRED. Full mental alertness is required for safe operation of machinery. Never operate under the influence of drugs or alcohol, when tired, or when distracted.

ELECTRICAL EQUIPMENT INJURY RISKS. You can be shocked, burned, or killed by touching live electrical components or improperly grounded machinery. To reduce this risk, only allow an electrician or qualified service personnel to do electrical installation or repair work, and always disconnect power before accessing or exposing electrical equipment.

DISCONNECT POWER FIRST. Always disconnect machine from power supply BEFORE making adjustments, changing tooling, or servicing machine. This eliminates the risk of injury from unintended startup or contact with live electrical components.

EYE PROTECTION. Always wear ANSI-approved safety glasses or a face shield when operating or observing machinery to reduce the risk of eye injury or blindness from flying particles. Everyday eyeglasses are not approved safety glasses.

WEARING PROPER APPAREL. Do not wear clothing, apparel, or jewelry that can become entangled in moving parts. Always tie back or cover long hair. Wear non-slip footwear to avoid accidental slips, which could cause loss of workpiece control.

HAZARDOUS DUST. Dust created while using machinery may cause cancer, birth defects, or long-term respiratory damage. Be aware of dust hazards associated with each workpiece material, and always wear a NIOSH-approved respirator to reduce your risk.

HEARING PROTECTION. Always wear hearing protection when operating or observing loud machinery. Extended exposure to this noise without hearing protection can cause permanent hearing loss.

REMOVE ADJUSTING TOOLS. Tools left on machinery can become dangerous projectiles upon startup. Never leave chuck keys, wrenches, or any other tools on machine. Always verify removal before starting!

INTENDED USAGE. Only use machine for its intended purpose and never make modifications not approved by Woodstock. Modifying machine or using it differently than intended may result in malfunction or mechanical failure that can lead to serious personal injury or death!

AWKWARD POSITIONS. Keep proper footing and balance at all times when operating machine. Do not overreach! Avoid awkward hand positions that make workpiece control difficult or increase the risk of accidental injury.

CHILDREN & BYSTANDERS. Keep children and bystanders at a safe distance from the work area. Stop using machine if they become a distraction.

GUARDS & COVERS. Guards and covers reduce accidental contact with moving parts or flying debris—make sure they are properly installed, undamaged, and working correctly.

FORCING MACHINERY. Do not force machine. It will do the job safer and better at the rate for which it was designed.

NEVER STAND ON MACHINE. Serious injury may occur if machine is tipped or if the cutting tool is unintentionally contacted.

STABLE MACHINE. Unexpected movement during operation greatly increases risk of injury or loss of control. Before starting, verify machine is stable and mobile base (if used) is locked.

USE RECOMMENDED ACCESSORIES. Consult this owner's manual or the manufacturer for recommended accessories. Using improper accessories will increase risk of serious injury.

UNATTENDED OPERATION. To reduce the risk of accidental injury, turn machine ***OFF*** and ensure all moving parts completely stop before walking away. Never leave machine running while unattended.

MAINTAIN WITH CARE. Follow all maintenance instructions and lubrication schedules to keep machine in good working condition. A machine that is improperly maintained could malfunction, leading to serious personal injury or death.

CHECK DAMAGED PARTS. Regularly inspect machine for any condition that may affect safe operation. Immediately repair or replace damaged or mis-adjusted parts before operating machine.

MAINTAIN POWER CORDS. When disconnecting cord-connected machines from power, grab and pull the plug—NOT the cord. Pulling the cord may damage the wires inside, resulting in a short. Do not handle cord/plug with wet hands. Avoid cord damage by keeping it away from heated surfaces, high traffic areas, harsh chemicals, and wet/damp locations.

EXPERIENCING DIFFICULTIES. If at any time you experience difficulties performing the intended operation, stop using the machine! Contact Technical Support at (360) 734-3482.

Additional Safety for Planers

PLANER INJURY RISKS. Familiarize yourself with the main injury risks associated with planers—always use common sense and good judgement to reduce your risk of injury. **Main injury risks from planers:** amputation/lacerations from contact with the moving cutterhead, entanglement/crushing injuries from getting caught in moving parts, blindness or eye injury from flying wood chips, or impact injuries from workpiece kickback.

KICKBACK. Know how to reduce the risk of kickback and kickback-related injuries. "Kickback" occurs during the operation when the workpiece is ejected from the machine at a high rate of speed. Kickback is commonly caused by poor workpiece selection, unsafe feeding techniques, or improper machine setup/maintenance. Kickback injuries typically occur as follows: (1) operator/bystanders are struck by the workpiece, resulting in impact injuries (i.e., blindness, broken bones, bruises, death); (2) operator's hands are pulled into blade, resulting in amputation or severe lacerations.

REACHING INSIDE PLANER. Never remove guards/covers or reach inside the planer during operation or while connected to power. You could be seriously injured if you accidentally touch the spinning cutterhead or get entangled in moving parts. If a workpiece becomes stuck or sawdust removal is necessary, turn planer OFF and disconnect power before clearing.

DULL/DAMAGED KNIVES/INSERTS. Only use sharp, undamaged knives/inserts. Dull or damaged knives/inserts increase the risk of kickback.

INSPECTING STOCK. To reduce the risk of kickback injuries or machine damage, thoroughly inspect and prepare the workpiece before cutting. Verify workpiece is free of nails, staples, loose knots or foreign material. Workpieces with minor warping should be jointed first or planed with the cupped side facing the infeed table.

BODY PLACEMENT. Stand to one side of planer during the entire operation to avoid getting hit if kickback occurs.

GRAIN DIRECTION. Planing across the grain is hard on the planer and may cause kickback. Plane in the same direction or at a slight angle with the wood grain.

PLANING CORRECT MATERIAL. Only plane natural wood stock. DO NOT plane MDF, OSB, plywood, laminates or other synthetic materials that can break up inside the planer and be ejected towards the operator.

LOOKING INSIDE PLANER. Wood chips fly around inside planer at a high rate of speed during operation. To avoid injury from flying material, DO NOT look inside planer during operation.

CUTTING LIMITATIONS. To reduce risk of kickback hazards or damage to machine, do not exceed maximum depth of cut or minimum board length and thickness found in Data Sheet. Only feed one board at a time.

INFEED ROLLER CLEARANCE. The infeed roller is designed to pull material into the spinning cutterhead. To reduce the risk of entanglement, keep hands, clothing, jewelry, and long hair away from the infeed roller during operation.

FEED WORKPIECE PROPERLY. To reduce the risk of kickback, never start planer with workpiece touching cutterhead. Allow cutterhead to reach full speed before feeding, and do not change feed speed during cutting operation.

WORKPIECE SUPPORT. To reduce risk of kickback, always make sure workpiece can move completely across table without rocking or tipping. Use auxiliary support stands for long stock.

SECURE KNIVES/INSERTS. Loose knives or improperly set inserts can become dangerous projectles or cause machine damage. Always verify knives/inserts are secure and properly adjusted before operation.

ELECTRICAL

Circuit Requirements

This machine must be connected to the correct size and type of power supply circuit, or fire or electrical damage may occur. Read through this section to determine if an adequate power supply circuit is available. If a correct circuit is not available, a qualified electrician MUST install one before you can connect the machine to power.

A power supply circuit includes all electrical equipment between the breaker box or fuse panel in the building and the machine. The power supply circuit used for this machine must be sized to safely handle the full-load current drawn from the machine for an extended period of time. (If this machine is connected to a circuit protected by fuses, use a time delay fuse marked D.)

Full-Load Current Rating

The full-load current rating is the amperage a machine draws at 100% of the rated output power. On machines with multiple motors, this is the amperage drawn by the largest motor or sum of all motors and electrical devices that might operate at one time during normal operations.

Full-Load Current Rating at 240V ..... 15 Amps

Circuit Requirements

This machine is prewired to operate on a 240V power supply circuit that has a verified ground and meets the following requirements:

Circuit Type ..... 240V, 60 Hz, Single-Phase
Circuit Size ..... 20 Amps
Plug/Receptacle ..... NEMA 6-20

⚠WARNING

The machine must be properly set up before it is safe to operate. DO NOT connect this machine to the power source until instructed to do so later in this manual.

⚠WARNING

Incorrectly wiring or grounding this machine can cause electrocution, fire, or machine damage. To reduce this risk, only an electrician or qualified service personnel should do any required electrical work on this machine.

NOTICE

The circuit requirements listed in this manual apply to a dedicated circuit—where only one machine will be running at a time. If this machine will be connected to a shared circuit where multiple machines will be running at the same time, consult with an electrician to ensure that the circuit is properly sized for safe operation.

Grounding Requirements

This machine MUST be grounded. In the event of certain types of malfunctions or breakdowns, grounding provides a path of least resistance for electric current to travel—in order to reduce the risk of electric shock.

Improper connection of the equipment-grounding wire will increase the risk of electric shock. The wire with green insulation (with/without yellow stripes) is the equipment-grounding wire. If repair or replacement of the power cord or plug is necessary, do not connect the equipment-grounding wire to a live (current carrying) terminal.

Check with a qualified electrician or service personnel if you do not understand these grounding requirements, or if you are in doubt about whether the tool is properly grounded. If you ever notice that a cord or plug is damaged or worn, disconnect it from power, and immediately replace it with a new one.

For 240V Connection

This machine is equipped with a power cord that has an equipment-grounding wire and NEMA 6-20 grounding plug. The plug must only be inserted into a matching receptacle (see **Figure**) that is properly installed and grounded in accordance with local codes and ordinances.

Extension Cords

We do not recommend using an extension cord with this machine. Extension cords cause voltage drop, which may damage electrical components and shorten motor life. Voltage drop increases with longer extension cords and the gauge smaller gauge sizes (higher gauge numbers indicate smaller sizes).

Any extension cord used with this machine must contain a ground wire, match the required plug and receptacle, and meet the following requirements:

Minimum Gauge Size at 240V ..... 12 AWG
Maximum Length (Shorter is Better) ..... 50 ft.

⚠WARNING

The machine must be properly set up before it is safe to operate. DO NOT connect this machine to the power source until instructed to do so later in this manual.

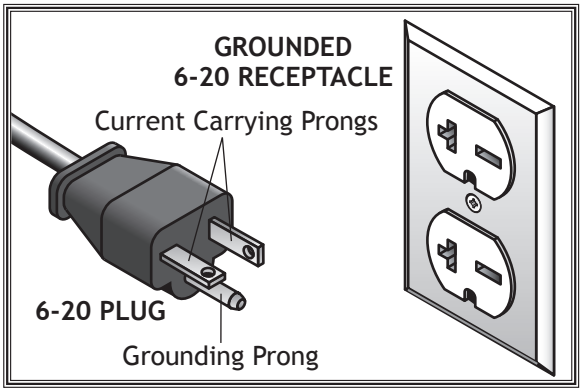

Figure 2. NEMA 6-20 plug & receptacle.

⚠CAUTION

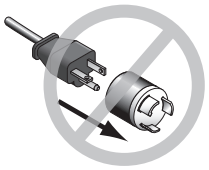

No adapter should be used with the required plug. If the plug does not fit the available receptacle or the machine must be reconnected to a different type of circuit, the reconnection must be made by an electrician or qualified service personnel and it must comply with all local codes and ordinances.

Wiring Diagram

DANGER

Disconnect power before performing any electrical service. Electricity presents serious shock hazards that will result in severe personal injury and even death!

COLOR KEY

BLACK	Bk
WHITE	Wt
GREEN	Gn
RED	Rd
BLUE	Bl

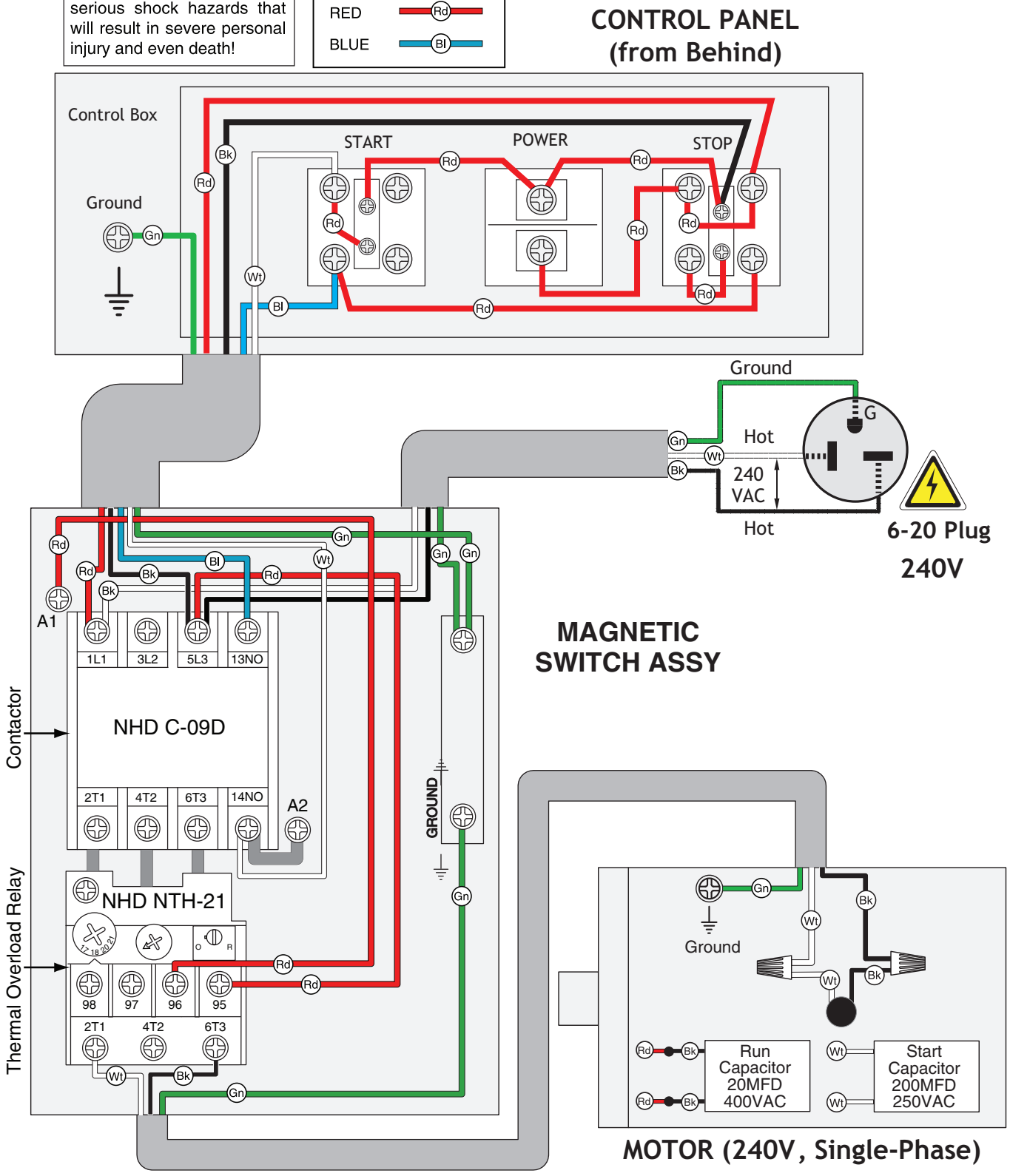

WOODSTOCK
INTERNATIONAL INC.

High Quality Machines and Tools

Woodstock International, Inc. carries thousands of products designed to meet the needs of today's woodworkers and metalworkers. Ask your dealer about these fine products:

BROSET® PRECISION STOP BLOCK
THE REBEL®
BOARD BUDDIES®
PLANER PAL®
SLICKPLANE®
ACCU-SHARP®
ROMAN CARBIDE®
JOINTER PAL®
DURASTICK®
SOUTH BEND™
STEELEX® FINE TOOLS
STEELEX® PLUS
Rotacator®
Gutmann®
Junglee®
PARROT VISE®
PRO-STIK® ABRASIVE BELT & DISC CLEANER
Aluma-Classic®
WOODSTOCK SHOP FOX® INTERNATIONAL

WHOLESALE ONLY

WOODSTOCK INTERNATIONAL, INC.
Phone: (360) 734-3482 · Fax: (360) 671-3053 · Toll Free Fax: (800) 647-8801
P.O.Box 2309 · Bellingham, WA 98227

SHOPFOX.BIZ

Model W1742S
15" Planer
with Spiral Cutterhead
Manual Insert

Phone #: (360) 734-3482 • Online Tech Support: tech-support@shopfox.biz • Web: www.shopfox.biz

The Model W1742S is the same as the Model W1742, except it has a spiral cutterhead. Besides the data sheet and parts in this insert, the content in the Model W1742 owner's manual is the same for both machines. Before operating your new machine, you MUST read and understand this insert and the entire Model W1742 manual to reduce the risk of injury from improper use or setup.

If you have any further questions about this manual insert or the differences between the Model W1742S and the Model W1742, contact our Technical Support at (360) 734-3482 or email tech-support@shopfox.biz.

COPYRIGHT © MAY, 2008 BY WOODSTOCK INTERNATIONAL, INC. REVISED SEPTEMBER, 2010 (TR)
WARNING: NO PORTION OF THIS PUBLICATION MAY BE REPRODUCED IN ANY SHAPE OR FORM WITHOUT
THE WRITTEN APPROVAL OF WOODSTOCK INTERNATIONAL, INC.
#10741TR
Printed in China

MACHINE SPECIFICATIONS

Phone #: (360) 734-3482 • Online Tech Support: tech-support@shopfox.biz • Web: www.shopfox.biz

MODEL W1742S
15" PLANER with SPIRAL CUTTERHEAD

Motor

Type	TEFC Capacitor Start Induction
Horsepower	3 HP
Voltage	220V
Prewired	220V
Phase	Single
Amps	15A
Speed	3450 RPM
Cycle	60 Hz
Number Of Speeds	1
Power Transfer	Triple V-Belt Drive
Bearings	Sealed and Lubricated

Main Specifications

Operation Information

Maximum Cutting Width	15"
Maximum Cutting Height	8"
Minimum Stock Length	6"
Minimum Stock Thickness	3/16"
Maximum Stock Thickness	8"
Number of Cuts Per Inch	104/56
Number of Cuts Per Minute (Effective)	20,000
Planing Feed Rate	16/30 FPM
Maximum Cutting Depth (Planing Full Width)	3/32"
Maximum Cutting Depth (Planing 6" Wide Board)	1/8"

Cutterhead Information

Cutterhead Type	Spiral with German-Made Indexable Carbide Inserts
Cutterhead Diameter	3"
Cutterhead Speed	5000 RPM
Number of Cutter Spirals	4
Number of Indexable Inserts	74
Cutter Insert Type	Indexable Carbide with 4 Cutting Edges
Cutter Dimensions	14 x 14 x 2 MM

Table Information

Table Size Including Wings	42"L x 15"W x 1 3/4"T
Table Movement	8"
Floor to Table Height	27"-35"
Number of Bed Rollers	2

Overall Dimensions

Weight	605 lbs.
Length	42"
Width	32-1/2"
Height	45-7/8"
Foot Print (Length/Width)	22 1/2" x 22"

Construction Materials

Body	Cast Iron
Cabinet	Formed Steel
Cutterhead	Steel
Infeed Roller	Solid Serrated Steel
Outfeed Roller	Solid Serrated Steel
Table	Precision Ground Cast Iron
Paint	Powder Coated

Shipping Dimensions

Carton #1

Type	Wood Crate
Content	Machine
Weight	684 Lbs.
Length/Width/Height	35½" x 30" x 47"

Electrical

Switch	Magnetic Switch with Thermal Overload Protection
Switch Voltage	220V
Cord Length	6 ft.
Cord Gauge	12 gauge
Recommended Circuit Size	20 amp
Included Plug	No
Recommended Plug	6-20

Other

Number of Dust Ports	1
Dust Port Size	4"
Mobile Base	Built-In
Customer Assembly Time	Approximately 30 Minutes
Warranty	2 Year
Country of Origin	China

Features

Spiral Cutterhead with German-Made Indexable Carbide Inserts
Precision Ground Cast-Iron Extension Wings
Built-In Mobile Base
Pedestal Mounted Control Switch
Inch and Metric Measurement Table Elevation Scale
Two Adjustable Bed Rollers
Chip Breaker and Pressure Bar
Top-Mounted Board Return Rollers
Four Column Support with Positive Table Locks
Two Speed Automatic Board Feed

Cabinet Breakdown

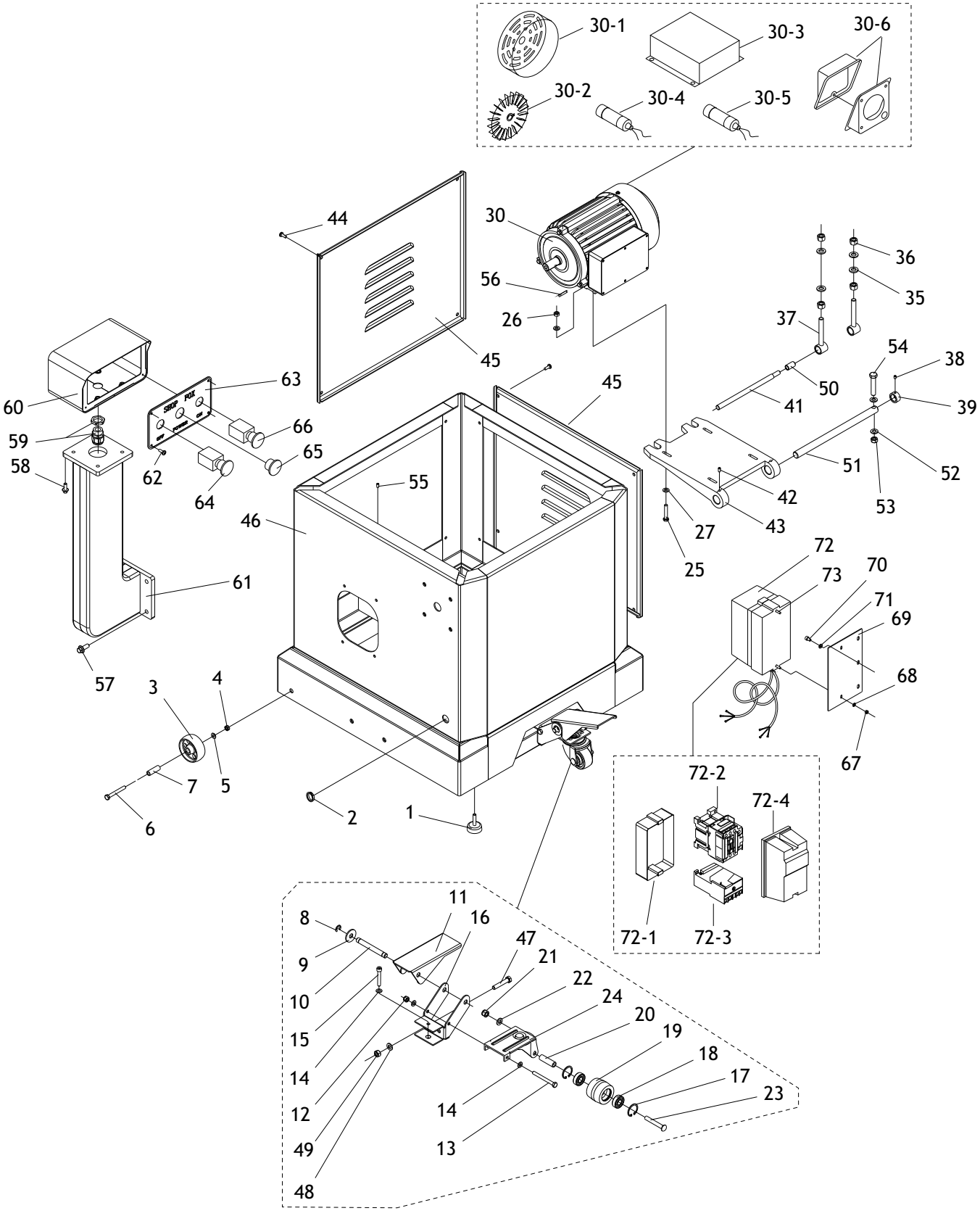

Cabinet Parts List

REF	PART #	DESCRIPTION
1	X1742001	RUBBER FEET
2	X1742002	STRAIN RELIEF
3	X1742003	UNIVERSAL PULLEY
4	XPN03M	HEX NUT M8-1.25
5	XPW01M	FLAT WASHER 8MM
6	XPB86M	HEX BOLT M8-1.25 X 65
7	X1742007	SLEEVE
8	XPR16M	EXT RETAINING RING 9MM
9	XPW06M	FLAT WASHER 12MM
10	X1742010	SHAFT 12MM
11	X1742011	PEDAL
12	XPN03M	HEX NUT M8-1.25
13	XPB45M	HEX BOLT M8-1.25 X 100
14	XPW01M	FLAT WASHER 8MM
15	XPB22M	HEX BOLT M8-1.25 X 50
16	X1742016	BRACKET
17	XPR21M	INT RETAINING RING 35MM
18	XP6202	BALL BEARING 6202
19	X1742019	TROLLEY WHEEL
20	X1742020	SLEEVE
21	XPLN09	LOCK NUT M12-1.75
22	XPW06M	FLAT WASHER 12MM
23	X1742023	SPECIAL BOLT
24	X1742024	TROLLEY UNIVERSAL KIT
25	XPB118M	HEX BOLT M8-1.25 X 45
26	XPN03M	HEX NUT M8-1.25
27	XPW01M	FLAT WASHER 8MM
30	X1742030	MOTOR 3HP 220V
30-1	X1742030-1	MOTOR FAN COVER
30-2	X1742030-2	MOTOR FAN
30-3	X1742030-3	CAPACITOR COVER
30-4	X1742030-4	RUN CAPACITOR 20UF 250VAC
30-5	X1742030-5	START CAPACITOR 500UF 125VAC
30-6	X1742030-6	JUNCTION BOX
35	XPW06M	FLAT WASHER 12MM
36	XPN09M	HEX NUT M12-1.75
37	X1742037	ADJUST BOLT
38	XPSS03M	SET SCREW M6-1 X 8

REF	PART #	DESCRIPTION
39	X1742039	COLLAR
41	X1742041	PLATE CONNECTING ROD
42	XPSS04M	SET SCREW M6-1 X 12
43	X1742043	MOTOR PLATE
44	XPFH06M	FLAT HD SCR M6-1 X 20
45	X1742045	COVER
46	X1742046	ENCLOSED STAND
47	XPB144M	HEX BOLT M10-1.5 X 55
48	XPW04M	FLAT WASHER 10MM
49	XPN02M	HEX NUT M10-1.5
50	X1742050	BUSHING
51	X1742051	PLATE CONNECTING ROD ASSY
52	XPW04M	FLAT WASHER 10MM
53	XPN02M	HEX NUT M10-1.5
54	XPB44M	HEX BOLT M10-1.5 X 75
55	XPSS14M	SET SCREW M8-1.25 X 12
56	XPK12M	KEY 5 X 5 X 30
57	XPB09M	HEX BOLT M8-1.25 X 20
58	XPB83M	HEX BOLT M6-1 X 16
59	X1742059	BALL STRAIN RELIEF
60	X1742060	CONTROL BOX
61	X1742061	SUPPORT ARM
62	XPHTEK6	TAP SCREW #10 X 3/8
63	X1742063	CONTROL PANEL
64	X1742064	EMERGENCY STOP BUTTON
65	X1742065	POWER LAMP
66	X1742066	ON BUTTON
67	X1742067	HEX NUT M5
68	XPW02M	FLAT WASHER 5MM
69	X1742069	PLATE
70	XPB17M	HEX BOLT M6-1X 10
71	XPW03M	FLAT WASHER 6MM
72	X1742072	MAGNETIC SWITCH ASSY
72-1	X1754072-1	SWITCH BOX BACK COVER
72-2	X1754072-2	CONTACTOR NHD C35-D 220V
72-3	X1754072-3	OL RELAY NHD NTH-32 26-32
72-4	X1754072-4	SWITCH BOX FRONT COVER
73	XPS22M	PHLP HD SCREW M5-.8 X 25

Headstock Breakdown

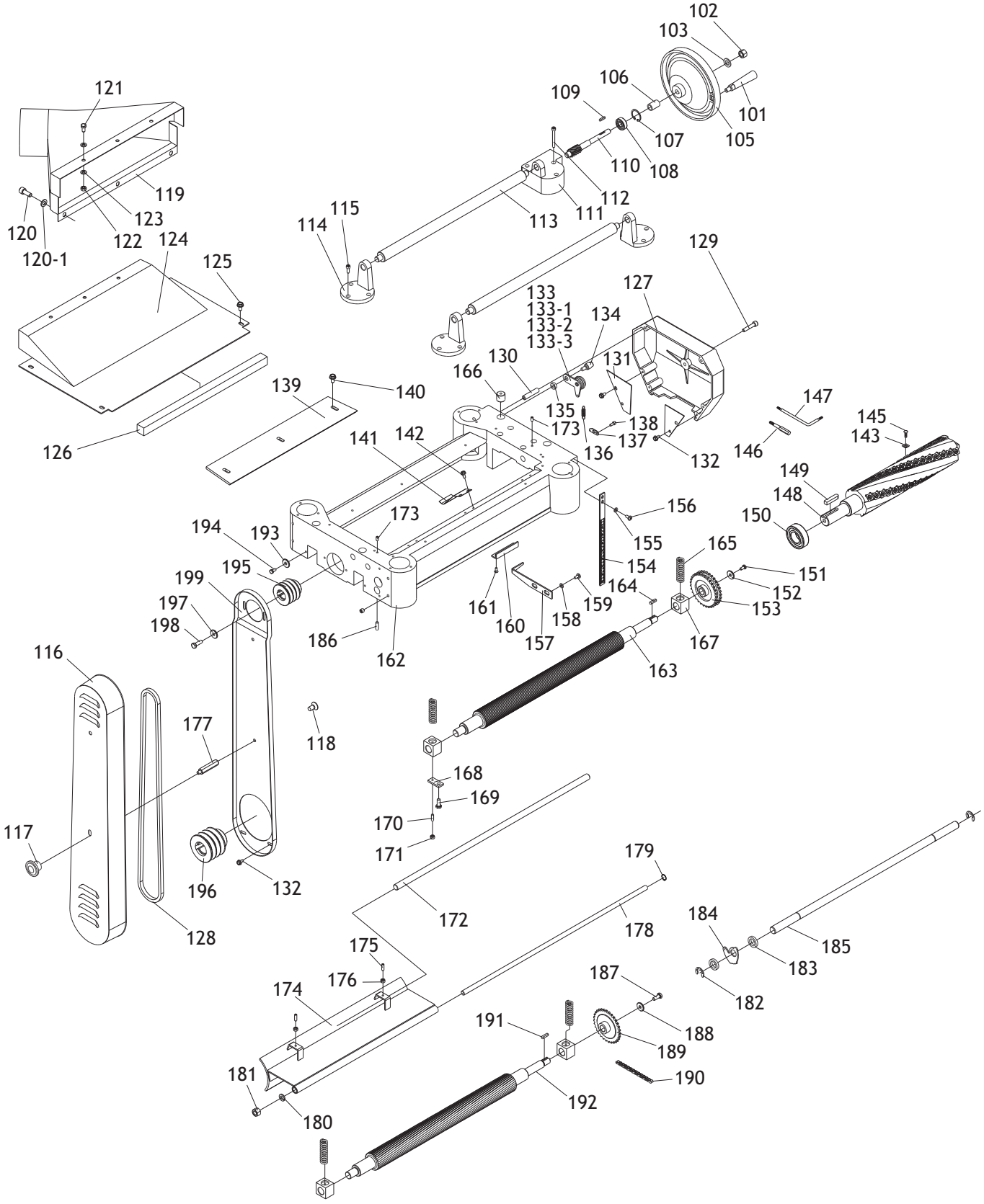

Headstock Parts List

REF	PART #	DESCRIPTION
101	X1742101	HANDLE
102	XPN09M	HEX NUT M12-1.75
103	XPW06M	FLAT WASHER 12MM
105	X1742105	HANDWHEEL
106	X1742106	COLLAR
107	XPR29M	INT RETAINIING RING 32MM
108	XP6201	BALL BEARING 6201
109	XPK48M	KEY 4 X 4 X 20
110	X1742110	WORM GEAR
111	X1742111	WORM HOUSING
112	X1742112	CAP SCREW M5-0.8 X 55
113	X1742113	ROLLER
114	X1742114	ROLLER STAND
115	PSB155M	CAP SCREW M8-1.25 X 14
116	X1742116	BELT COVER
117	X1742117	FEMALE KNOB M8-1.25
118	XPFH02M	FLAT HD SCR M6-1 X 12
119	X1742119	DUST HOOD
120	XPSB14M	CAP SCREW M8-1.25 X 20
120-1	XPW01M	FLAT WASHER 8MM
121	XPB04M	HEX BOLT M6-1 X 10
122	XPN01M	HEX NUT M6-1
123	XPW03M	FLAT WASHER 6MM
124	X1742124	UPPER COVER
125	XPFB01M	FLANGE BOLT M6-1 X 12
126	X1742126	FOAM
127	X1742127	GEAR BOX COVER
128	XPVMX60	V-BELT MX-60
129	XPSB45M	CAP SCREW M8-1.25 X 45
130	XPRP07M	ROLL PIN 6 X 20
131	X1742131	SAFETY HATCH
132	XPFB09M	FLANGE BOLT M6-1 X 10
133	X1742133	IDLE BRACKET ASSY
133-1	X1742133-1	BRACKET
133-2	X1742133-2	IDLE PULLEY
133-3	X1742133-3	IDLE SHAFT
134	X1742134	SHAFT
135	X1742135	COLLAR
136	X1742136	EXTENSION SPRING
137	X1742137	HANGER
138	XPSB68M	CAP SCREW M6-1 X 8
139	X1742139	CHIP DEFLECTOR PLATE
140	XPFB01M	FLANGE BOLT M6-1 X 12
141	X1742141	PRESS PLATE
142	XPFB01M	FLANGE BOLT M6-1 X 12
143	X1741S164	INDEXABLE INSERT 14 X 14 X 2
145	XPFH35M	FLAT HD TORX SCR T20 M6-1 X 15
146	X1741S227	DRIVER BIT TORX T20
147	X1741S228	L-WRENCH TORX T20
148	X1742S148	SPIRAL CUTTERHEAD
149	XPK129M	KEY 8 X 8 X 36

REF	PART #	DESCRIPTION
150	XP6205	BALL BEARING 6205
151	XPB83M	HEX BOLT M6-1 X 16
152	XPW03M	FLAT WASHER 6MM
153	X1742153	SPROCKET
154	X1742154	SCALE
155	XPW03M	FLAT WASHER 6MM
156	XPS14M	PHLP HD SCR M6-1 X 12
157	X1742157	POINTER
158	XPW03M	FLAT WASHER 6MM
159	XPS14M	PHLP HD SCR M6-1 X 12
160	X1742160	CUT LIMIT PLATE
161	XPS03M	PHLP HD SCR M6-1 X 8
162	X1742162	HEAD CASTING
163	X1742163	OUTFEED ROLLER
164	XPK08M	KEY 5 X 5 X 16
165	X1742165	COMPRESSION SPRING
166	X1742166	SPECIAL SET SCREW
167	X1742167	BUSHING
168	X1742168	PLATE
169	XPB03M	HEX BOLT M8-1.25 X 16
170	XPSS53M	SET SCREW M5-.8 X 12
171	XPN06M	HEX NUT M5-0.8
172	X1742172	SHAFT
173	XPSS25M	SET SCREW M6-1 X 20
174	X1742174	CHIP BREAKER
175	XPSS58M	SET SCREW M6-1 X 18
176	XPN01M	HEX NUT M6-1
177	X1742177	RECEIVER PIN
178	X1742178	LOCKING ROD
179	XPR03M	EXT RETAINING RING 12MM
180	XPLW05M	LOCK WASHER 12MM
181	XPN09M	HEX NUT M12-1.75
182	XPEC05M	E-CLIP 15MM
183	X1742183	COLLAR
184	X1742184	ANTI-KICKBACK FINGER
185	X1742185	SHAFT
186	XPSS06M	SET SCREW M8-1.25 X 16
187	XPB83M	HEX BOLT M6-1 X 16
188	XPW03M	FLAT WASHER 6MM
189	X1742189	SPROCKET
190	X1742190	CHAIN 06B-1 X 63
191	XPK08M	KEY 5 X 5 X 16
192	X1742192	INFEED ROLLER
193	XPW03M	FLAT WASHER 6MM
194	XPB02M	HEX BOLT M6-1 X 12
195	X1742195	CUTTERHEAD PULLEY
196	X1742196	MOTOR PULLEY
197	X1742197	COLLAR
198	XPB09M	HEX BOLT M8-1.25 X 20
199	X1742199	BELT GUARD

Gearbox Breakdown

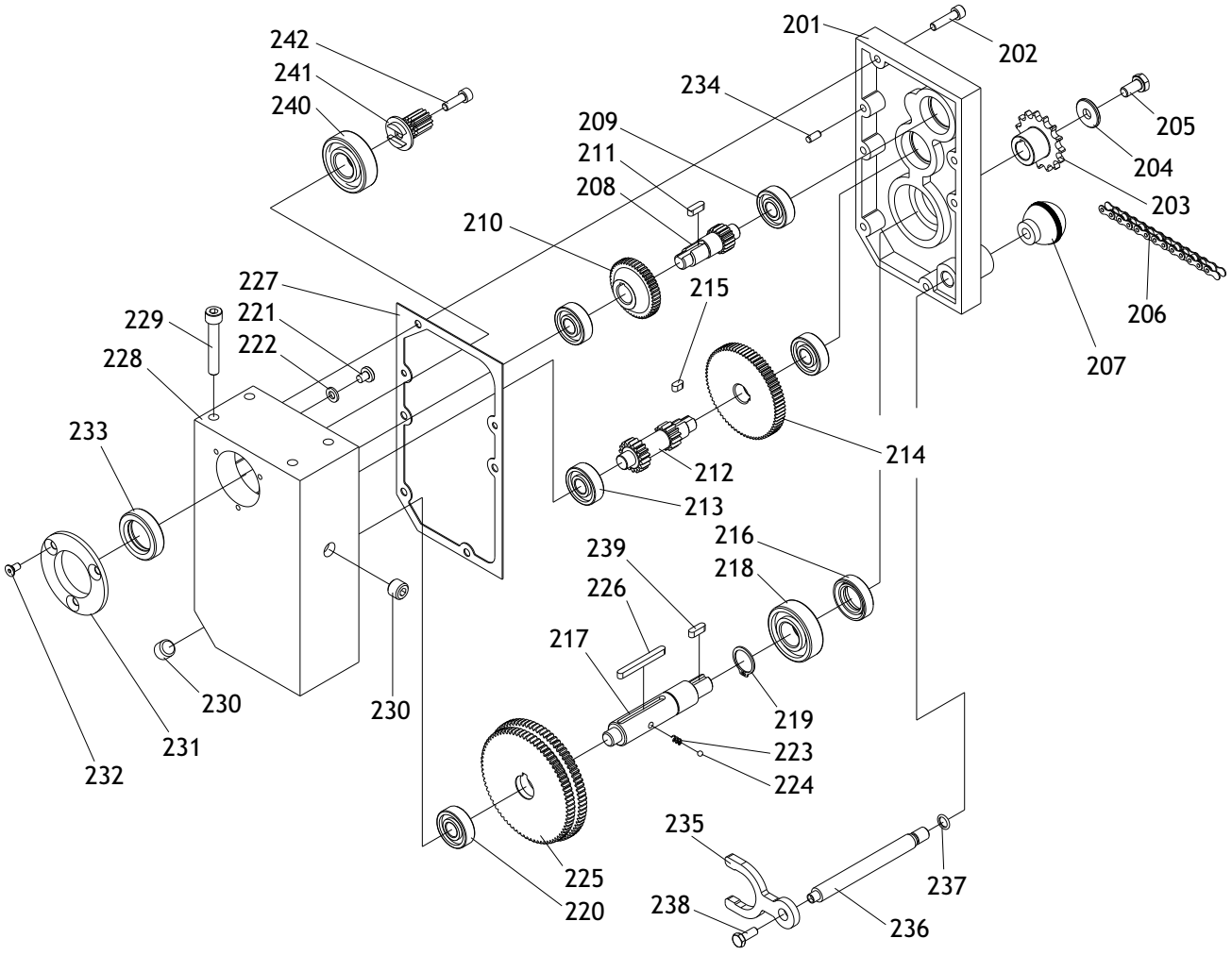

REF	PART #	DESCRIPTION
201	X1742201	GEAR BOX
202	XPB10M	HEX BOLT M6-1 X 25
203	X1742203	SPROCKET
204	XPW01M	FLAT WASHER 8MM
205	XPB03M	HEX BOLT M8-1.25 X 16
206	X1742206	CHAIN 06B-1 X 51
207	X1742207	FEMALE KNOB M8-1.25
208	X1742208	SHAFT
209	XP6201	BALL BEARING 6201
210	X1742210	GEAR
211	XPK19M	KEY 5 X 5 X 14
212	X1742212	SHAFT
213	XP6201	BALL BEARING 6201
214	X1742214	GEAR
215	XPK06M	KEY 5 X 5 X 10
216	X1742216	OIL SEAL 25 X 32 X X 7
217	X1742217	SHAFT
218	XP6204	BALL BEARING 6204
219	XPR09M	EXT RETAINING RING 20MM
220	XP6201	BALL BEARING 6201
221	XPS03M	PHLP HD SCR M6-1 X 8

REF	PART #	DESCRIPTION
222	XPW03M	FLAT WASHER 6MM
223	X1742223	COMPRESSION SPRING
224	X1742224	STEEL BALL 4MM
225	X1742225	GEAR
226	XPK36M	KEY 5 X 5 X 50
227	X1742227	GASKET
228	X1742228	GEAR BOX COVER
229	XPB22M	HEX BOLT M8-1.25 X 50
230	X1742230	OIL PLUG
231	X1742231	FLANGE COVER
232	XPSB33M	CAP SCREW M5-.8 X 12
233	X1742233	OIL SEAL 25 X 40 X 10
234	XPRP35M	PIN 5 X 10
235	X1742235	SHIFT FORK
236	X1742236	HANDLE SHAFT
237	X1742237	O-RING 16 X 2.4
238	XPFB01M	FLANGE BOLT M6-1 X 12
239	XPK08M	KEY 5 X 5 X 16
240	XP6204	BALL BEARING 6204
241	X1742241	GEAR
242	XPSS25M	SET SCREW M6-1 X 20

Columns Breakdown

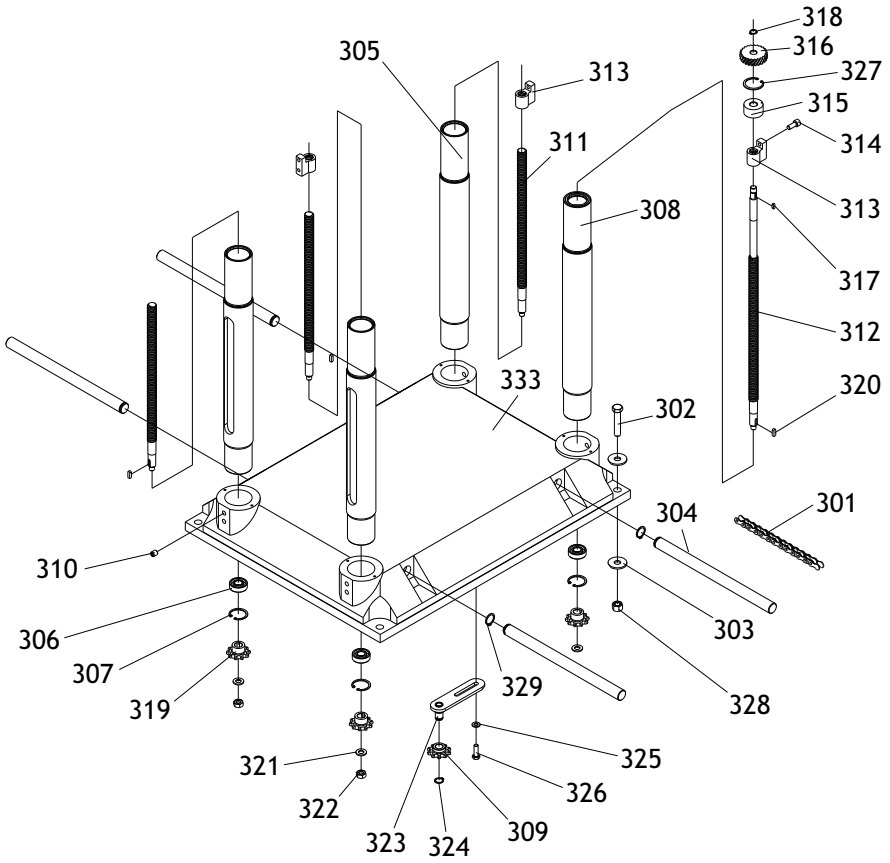

REF	PART #	DESCRIPTION
301	X1742301	CHAIN 12.7 AX 134
302	XPB24M	HEX BOLT M12-.175 X 45
303	XPW06M	FLAT WASHER 12MM
304	X1742304	LIFTING BAR
305	X1742305	COLUMN
306	P6302	BALL BEARING 6302
307	XPR24M	INT RETAINING RING 42MM
308	X1742308	COLUMN
309	X1742309	SPROCKET
310	XPSS13M	SET SCREW M10-1.5 X 12
311	X1742311	LEAD SCREW
312	X1742312	LEAD SCREW
313	X1742313	LEAD NUT
314	XPSB02M	CAP SCREW M6-1 X 20
315	X1742315	BUSHING

REF	PART #	DESCRIPTION
316	X1742316	GEAR
317	XPK69M	KEY 4 X 4 X 12
318	XPR03M	EXT RETAINING RING 12MM
319	X1742319	SPROCKET
320	XPK08M	KEY 5 X 5 X 16
321	XPW04M	FLAT WASHER 10MM
322	XPN02M	HEX NUT M10-1.5
323	X1742323	BRACKET
324	XPR05M	EXT RETAINING RING 15MM
325	XPW01M	FLAT WASHER 8MM
326	XPB09M	HEX BOLT M8-1.25 X 20
327	XPR23M	INT RETAINING RING 40MM
328	XPN09M	HEX NUT M12-1.75
329	XPR05M	EXT RETAINING RING 15MM
333	X1742333	BASE

Table Breakdown

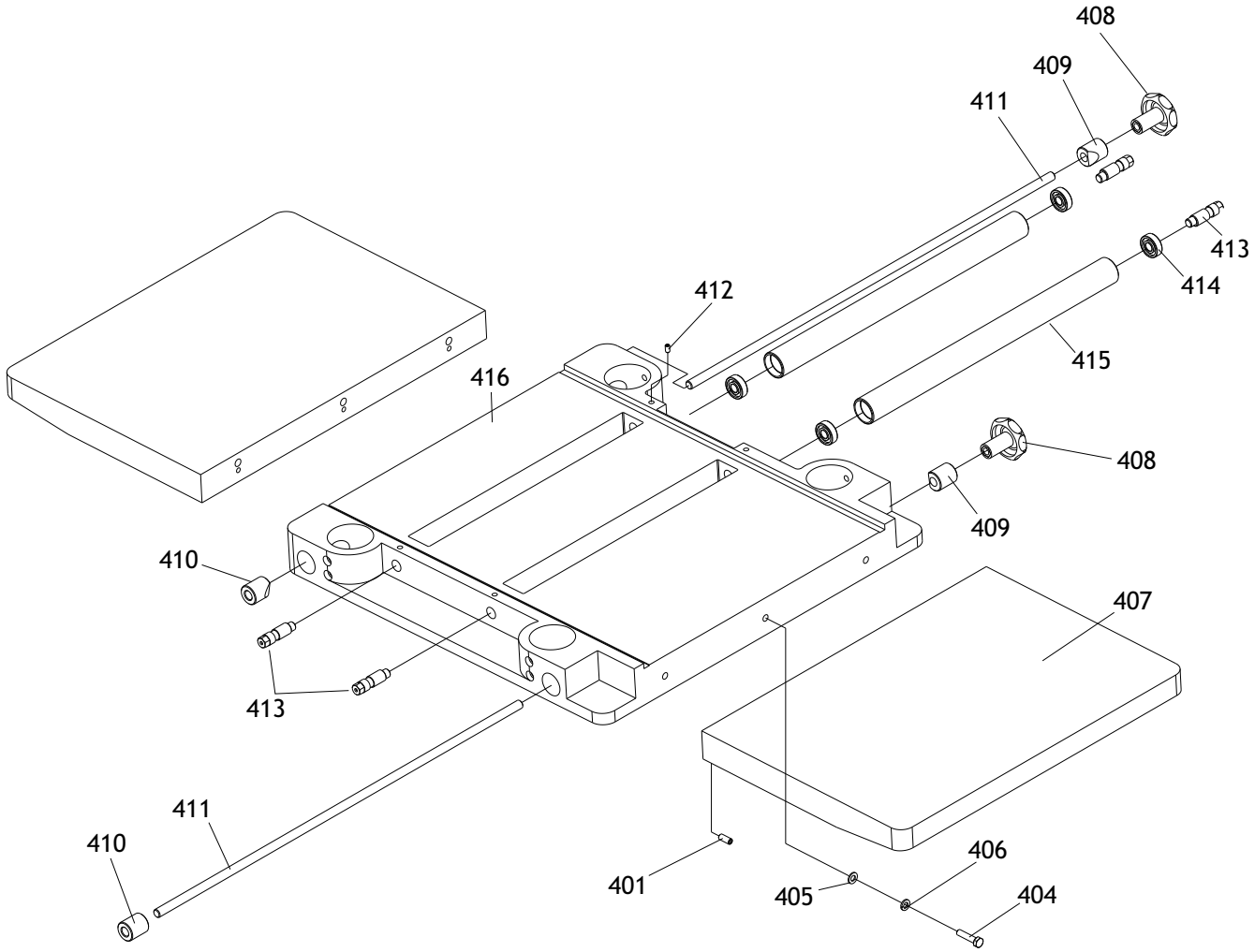

REF	PART #	DESCRIPTION
401	XPSS09M	SET SCREW M8-1.25 X 20
404	XPB26M	HEX BOLT M8-1.25 X 30
405	XPW01M	FLAT WASHER 8MM
406	XPLW04M	LOCK WASHER 8MM
407	X1742407	EXTENSION WING
408	X1742408	FEMALE KNOB M12-1.75
409	X1742409	WEDGE DOG

REF	PART #	DESCRIPTION
410	X1742410	GIB
411	X1742411	LOCK BAR
412	XPSS11M	SET SCREW M6-1 X 16
413	X1742413	ECCENTRIC SHAFT
414	XP6203	BALL BEARING 6203
415	X1742415	ROLLER
416	X1742416	TABLE/BED

Labels & Cosmetics

⚠WARNING

Safety labels warn about machine hazards and ways to prevent injury. The owner of this machine MUST maintain the original location and readability of the labels on the machine. If any label is removed or becomes unreadable, REPLACE that label before using the machine again. Contact Woodstock International, Inc. at (360) 734-3482 or www.shopfoxtools.com to order new labels.

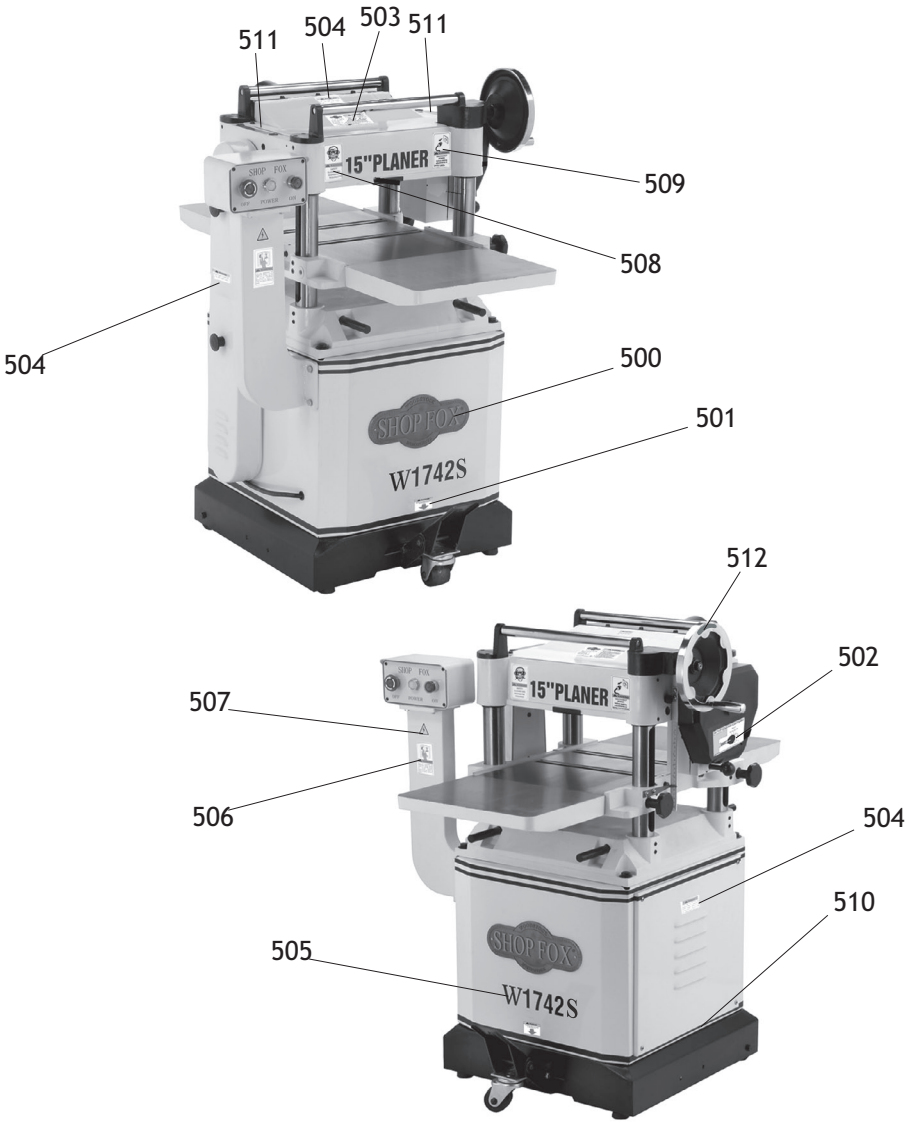

REF	PART #	DESCRIPTION
500	X1742500	SHOP FOX LOGO PLATE
501	X1742501	LOCK BASE LABEL
502	X1742502	SHIFT GEARS LABEL
503	X1742S503	MACHINE ID LABEL
504	XLABEL-03S	KEEP CLOSED LABEL
505	X1742S505	W1742S LABEL
506	XLABEL-08	READ MANUAL LABEL

REF	PART #	DESCRIPTION
507	XLABEL-04S	ELECTRICTY LABEL
508	XLABEL-06	RESPIRATOR/GLASSES LABEL
509	XLABEL-02	UNPLUG LABEL
510	X1742510	PINSTRIPE TAPE
511	X1742511	OIL HERE LABEL
512	X1742512	ROTATION LABEL

Model W1742

15" PLANER

MANUAL UPDATE

This update covers changes made to the machine after the owner's manual was printed. Keep this update with your owner's manual for future reference. *If you have questions, contact Tech Support at (360) 734-3482 or by email at* ***tech_support@shopfox.biz****.*

Why the Update?

We recently re-designed the Model W1742 motor and changed the capacitor wiring. **Figure 1** shows the new motor wiring.

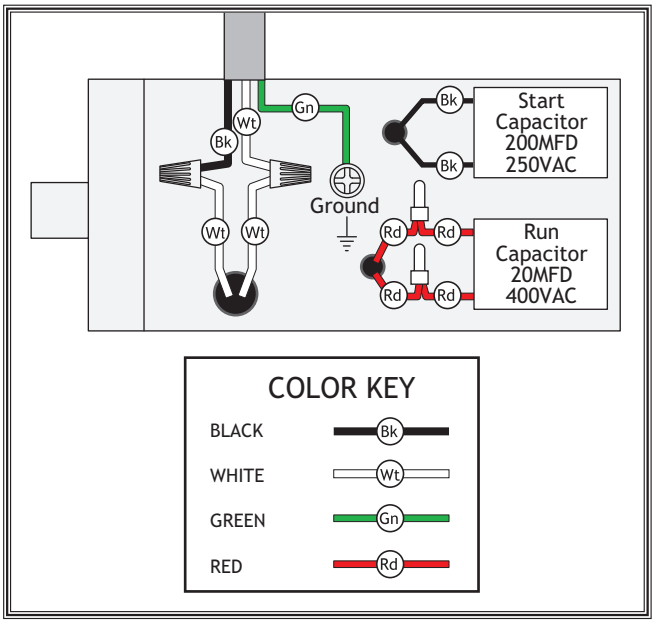

Figure 1. Model W1742 new motor and capacitor wiring.

New Parts for W1742

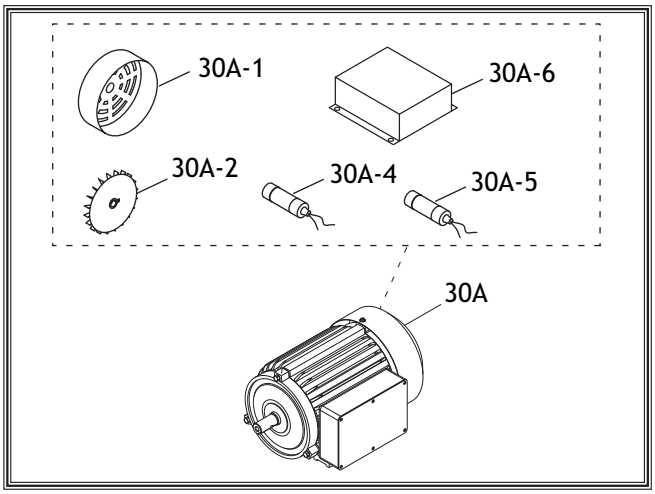

Figure 2. W1742 new motor breakdown.

REF	PART #	DESCRIPTION
30A	X1742030A	MOTOR 3HP 220V V2.03.08
30A-1	X1742030A-1	MOTOR FAN COVER V2.03.08
30A-2	X1742030A-2	MOTOR FAN V2.03.08
30A-4	X1742030A-4	R CAP 20MF 400VAC
30A-5	X1742030A-5	S CAP 200MF 250VAC
30A-6	X1742030A-6	JUNCTION BOX V2.03.08

COPYRIGHT © MARCH, 2008 BY WOODSTOCK INTERNATIONAL, INC.

WARNING: NO PORTION OF THIS MANUAL MAY BE REPRODUCED IN ANY SHAPE OR FORM WITHOUT THE WRITTEN APPROVAL OF WOODSTOCK INTERNATIONAL, INC.

#10610BL **Printed in China**

Woodstock International, Inc.
P.O. Box 2309
Bellingham, WA 98227

Phone: (800) 840-8420
FAX: (360) 676-1075
www.woodstockinternational.com

Dear Valued Customer,

Your new Shop Fox Model W1742 15" Planer may or may not have switch buttons with light bulbs inside. If your machine does have these type of switch buttons, the light bulb inside is not intended to be functional with your machine and is not wired as such, or displayed in the wiring diagram in your owner's manual.

The buttons with bulbs start and stop the machine as intended, and they will not hinder the performance of your machine in any way.

Sincerely,
The Woodstock International Quality Control Team

Woodstock International, Inc.
P.O. Box 2309
Bellingham, WA 98227

Phone: (800) 840-8420
FAX: (360) 676-1075
www.woodstockinternational.com

Dear Valued Customer,

Your new Shop Fox Model W1742 15" Planer may or may not have switch buttons with light bulbs inside. If your machine does have these type of switch buttons, the light bulb inside is not intended to be functional with your machine and is not wired as such, or displayed in the wiring diagram in your owner's manual.

The buttons with bulbs start and stop the machine as intended, and they will not hinder the performance of your machine in any way.

Sincerely,
The Woodstock International Quality Control Team

WOODSTOCK

SHOP FOX®

INTERNATIONAL

MODEL W1742
15" PLANER WITH CAST IRON WINGS

OWNER'S MANUAL

Phone: (360) 734-3482 • On-Line Technical Support: tech-support@shopfox.biz

COPYRIGHT © JANUARY, 2006 BY WOODSTOCK INTERNATIONAL, INC.
WARNING: NO PORTION OF THIS MANUAL MAY BE REPRODUCED IN ANY SHAPE OR FORM WITHOUT THE WRITTEN APPROVAL OF WOODSTOCK INTERNATIONAL, INC.

#7788CR

Printed in China

⚠ WARNING!

This manual provides critical safety instructions on the proper setup, operation, maintenance and service of this machine/equipment.

Failure to read, understand and follow the instructions given in this manual may result in serious personal injury, including amputation, electrocution or death.

The owner of this machine/equipment is solely responsible for its safe use. This responsibility includes but is not limited to proper installation in a safe environment, personnel training and usage authorization, proper inspection and maintenance, manual availability and comprehension, application of safety devices, blade/cutter integrity, and the usage of personal protective equipment.

The manufacturer will not be held liable for injury or property damage from negligence, improper training, machine modifications or misuse.

⚠ WARNING!

Some dust created by power sanding, sawing, grinding, drilling, and other construction activities contains chemicals known to the State of California to cause cancer, birth defects or other reproductive harm. Some examples of these chemicals are:

- **Lead from lead-based paints.**
- **Crystalline silica from bricks, cement and other masonry products.**
- **Arsenic and chromium from chemically-treated lumber.**

Your risk from these exposures varies, depending on how often you do this type of work. To reduce your exposure to these chemicals: Work in a well ventilated area, and work with approved safety equipment, such as those dust masks that are specially designed to filter out microscopic particles.

Contents

INTRODUCTION **3**
Woodstock Technical Support 3
About Your New 15" Planer 3
Specifications 4
Controls and Features 5
SAFETY **6**
Standard Safety Instructions 6
Additional Safety Instructions for Planers 8
ELECTRICAL **9**
220V Operation 9
Extension Cords 9
Grounding 9
SET UP **10**
Unpacking 10
Inventory 10
Machine Placement 11
Cleaning Machine 11
Cast Iron Wings 12
Handwheel 13
Dust Hood 13
Caster and Foot Jack 13
Table Roller Adjustment 14
Checking for Oil 15
Test Run 15
OPERATIONS **16**
General 16
Feed Rate 17
Operational Tips 18
MAINTENANCE **19**
General 19
Cleaning 19
Table and Base 19
Basic Adjustment Tools 20
Optional Adjustment Tools 20
Lubrication 21
Anti-Kickback Pawls 22
Belt Tension 23
Pulley Alignment 23
Knife Replacement (Jack Screw Style) 24
Knife Replacement (Spring Style) 25
Knife Tightening 26
Table Adjustment 27
Feed Roller and Chip Breaker Adjustment 29
Roller Spring Tension 31
Chip Deflector 31
Troubleshooting 32
220V Single Phase Wiring Diagram 34

Continued on next page

USE THE QUICK GUIDE PAGE LABELS TO SEARCH OUT INFORMATION FAST!

PARTS 36
Cabinet Diagram 36
Cabinet Parts List 37
Headstock Parts Diagram 38
Headstock Parts List 39
Gearbox Diagram 40
Gearbox Parts List 41
Lower Table Diagram & Parts List 42
Upper Table Diagram & Parts List 43
Label Placement 44
Label List 45
Warranty 46
Warranty Registration 47

USE THE QUICK GUIDE PAGE LABELS TO SEARCH OUT INFORMATION FAST!

INTRODUCTION

Woodstock Technical Support

We stand behind our machines! In the event that questions arise about your machine, parts are missing, or a defect is found, please contact Woodstock International Technical Support at (360) 734-3482 or send e-mail to: **tech-support@shopfox.biz**. Our knowledgeable staff will help you troubleshoot problems and send out parts for warranty claims.

If you need the latest edition of this manual, you can download it from **http://www.shopfox.biz**.
If you still have questions after reading the latest manual, or if you have comments please contact us at:

Woodstock International, Inc.
Attn: Technical Support Department
P.O. Box 2309
Bellingham, WA 98227

About Your New 15" Planer

Your new **SHOP FOX®** 15" Planer with Cast-Iron Wings has been specially designed to provide many years of trouble-free service. Close attention to detail, ruggedly built parts and a rigid quality control program assure safe and reliable operation.

This 15" Planer with precision-ground cast-iron wings, has a stationary headstock and a cast-iron moveable table, which guarantees consistent planing depth without the potential for headstock lifting during planing. The Model W1742 planer has a built-in mobile base which moves over 600 lbs. worth of vibration dampening mass. A 3 HP motor drives the three knife cutterhead along with a two speed gearbox and roller system.

Woodstock International, Inc. is committed to customer satisfaction in providing this manual. It is our intent to include all the information necessary for safety, ease of assembly, practical use and durability of this product.

Specifications

Motor	3 HP, 18A, 220V, 3450 RPM, Single-Phase
Maximum Workpiece Width	15"
Maximum Workpiece Thickness	8"
Minimum Workpiece Thickness	3/16"
Minimum Workpiece Length	8"
Maximum Depth of Cut	1/8"
Cutterhead Knives	3
Cutterhead Knife Size	15"L X 1"W X 1/8"T
Cutterhead Diameter	3"
Cutterhead Speed	5,000 RPM
Cuts Per-Minute	15,000
Approximate Handwheel Rotation-to-Table Travel	360º= 0.060"
Dust Port Size	4"
Footprint	22" x 22-1/2"
Overall Width	32-1/2"
Overall Height	45-7/8"
Overall Depth	42"
Table Size w/Wings	15" x 42"
Table Size wo/Wings	15" x 20"
Feed Rate	16 and 30 FPM
Table and Wings	Precision Ground Cast Iron
In-Feed Roller	Solid-Serrated Steel
Out-Feed Roller	Solid-Knurled Steel
Board Return Rollers	Two Chrome Solid-Steel
Table Rollers	Two Solid-Steel
Power Transfer	Triple V-belt
Bearings	Sealed and Permanently Lubricated Ball Bearings
Power Control	Magnetic Contactor w/Thermal Relay and Emergency Stop
Table Locks	Two Positive-Lock Knobs
Dust Port	One 4"
Table Height Measurement Scale	Metric and Inches
Shipping Weight	661 lbs.

Controls and Features

Take the time to familiarize yourself with the controls of your new planer. They will be frequently mentioned throughout the instructions in this manual, and the better you know your machine, the better you can make it perform. **Figure 1** points out the key controls and their locations.

As with all precision machinery, adjustments to the planer require very close tolerances. The adjustments described in this section will be factory set. However, during the life of the machine it will necessary to make these adjustments yourself. Many of these adjustments require the use of an indicating tool such as a dial indicator or a Rotacator® to achieve accurate results.

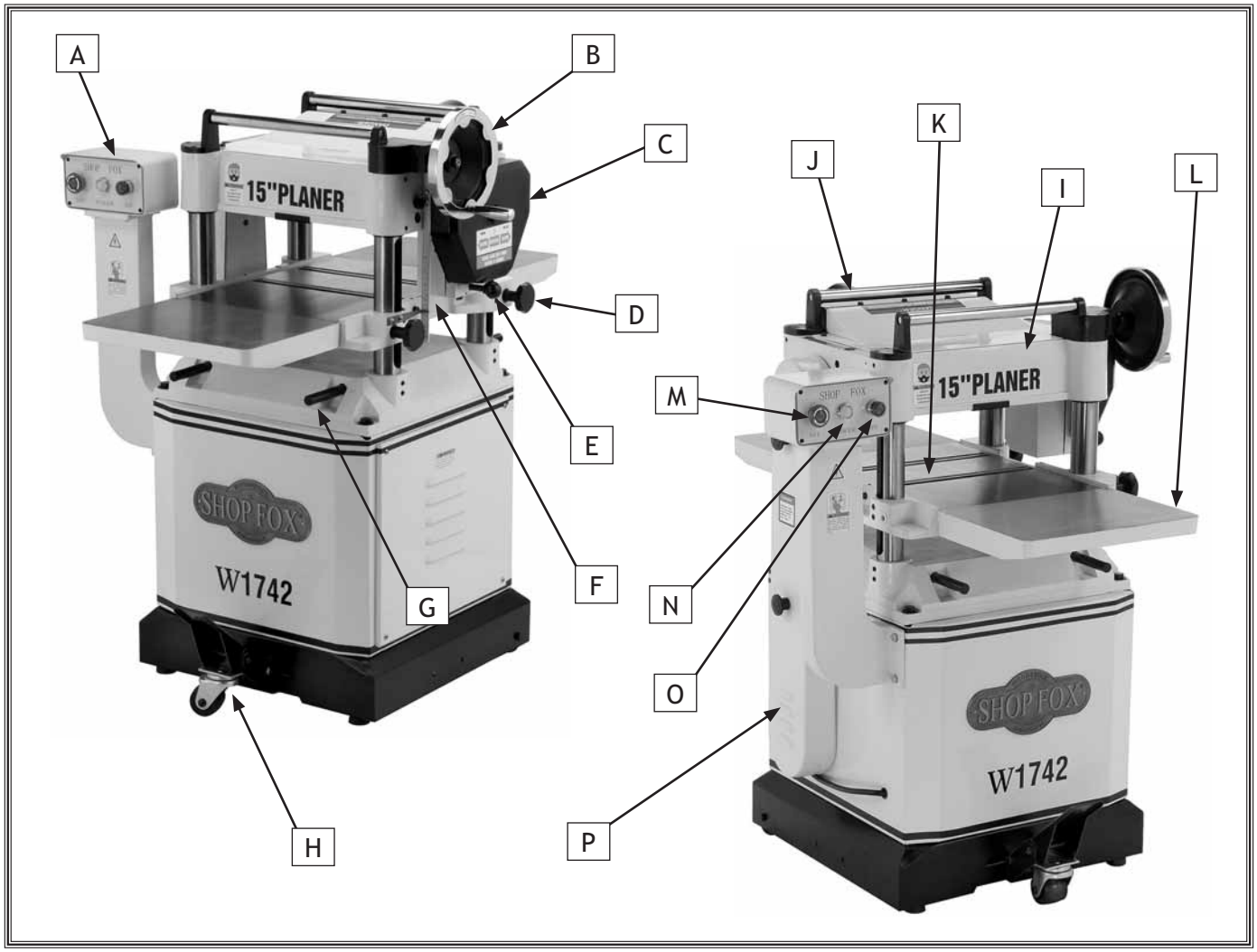

Figure 1. Controls and features.

A. Control Panel
B. Table Height Handwheel
C. Feed Roller Gearbox
D. Table Lock Knob
E. Feed Rate Selector
F. Table Height Scale
G. Retractable Lifting Rods
H. Caster Wheel and Lock
I. Headstock
J. Return Roller
K. Table Roller
L. Cast Iron Wing
M. Emergency Stop Button
N. Power Lamp
O. ON Push Button
P. Drive Belt Cover

SAFETY

READ MANUAL BEFORE OPERATING MACHINE. FAILURE TO FOLLOW INSTRUCTIONS BELOW WILL RESULT IN PERSONAL INJURY.

⚠DANGER Indicates an imminently hazardous situation which, if not avoided, WILL result in death or serious injury.

⚠WARNING Indicates a potentially hazardous situation which, if not avoided, COULD result in death or serious injury.

⚠CAUTION Indicates a potentially hazardous situation which, if not avoided, MAY result in minor or moderate injury.

NOTICE This symbol is used to alert the user to useful information about proper operation of the equipment, and/or a situation that may cause damage to the machinery.

Standard Safety Instructions

1. **READ THROUGH THE ENTIRE MANUAL BEFORE STARTING MACHINERY.** Machinery presents serious injury hazards to untrained users.

2. **ALWAYS USE ANSI APPROVED SAFETY GLASSES WHEN OPERATING MACHINERY.** Everyday eyeglasses only have impact resistant lenses, they are NOT safety glasses.

3. **ALWAYS WEAR AN ANSI APPROVED RESPIRATOR WHEN OPERATING MACHINERY THAT PRODUCES DUST.** Wood dust is a carcinogen and can cause cancer and severe respiratory illnesses.

4. **ALWAYS USE HEARING PROTECTION WHEN OPERATING MACHINERY.** Machinery noise can cause permanent hearing damage.

5. **WEAR PROPER APPAREL.** DO NOT wear loose clothing, gloves, neckties, rings, or jewelry which may get caught in moving parts. Wear protective hair covering to contain long hair and wear non-slip footwear.

6. **NEVER OPERATE MACHINERY WHEN TIRED, OR UNDER THE INFLUENCE OF DRUGS OR ALCOHOL.** Be mentally alert at all times when running machinery.

7. **ONLY ALLOW TRAINED AND PROPERLY SUPERVISED PERSONNEL TO OPERATE MACHINERY.** Make sure operation instructions are safe and clearly understood.

8. **KEEP CHILDREN AND VISITORS AWAY.** Keep all children and visitors a safe distance from the work area.

9. **MAKE WORKSHOP CHILD PROOF.** Use padlocks, master switches, and remove start switch keys.

10. **NEVER LEAVE WHEN MACHINE IS RUNNING.** Turn power ***OFF*** and allow all moving parts to come to a complete stop before leaving machine unattended.

11. **DO NOT USE IN DANGEROUS ENVIRONMENTS.** DO NOT use machinery in damp, wet locations, or where any flammable or noxious fumes may exist.

12. **KEEP WORK AREA CLEAN AND WELL LIT.** Clutter and dark shadows may cause accidents.

13. **USE A GROUNDED EXTENSION CORD RATED FOR THE MACHINE AMPERAGE.** Undersized cords overheat and lose power. Replace extension cords if they become damaged. DO NOT use extension cords for 220V machinery.

14. **ALWAYS DISCONNECT FROM POWER SOURCE BEFORE SERVICING MACHINERY**. Make sure switch is in OFF position before reconnecting.

15. **MAINTAIN MACHINERY WITH CARE.** Keep blades sharp and clean for best and safest performance. Follow instructions for lubricating and changing accessories.

16. **MAKE SURE GUARDS ARE IN PLACE AND WORK CORRECTLY BEFORE USING MACHINERY.**

17. **REMOVE ADJUSTING KEYS AND WRENCHES.** Make a habit of checking for keys and adjusting wrenches before turning machinery ***ON***.

18. **CHECK FOR DAMAGED PARTS BEFORE USING MACHINERY.** Check for binding and alignment of parts, broken parts, part mounting, loose bolts, and any other conditions that may affect machine operation. Repair or replace damaged parts.

19. **USE RECOMMENDED ACCESSORIES.** Refer to the instruction manual for recommended accessories. The use of improper accessories may cause risk of injury.

20. **DO NOT FORCE MACHINERY.** Work at the speed for which the machine or accessory was designed.

21. **SECURE WORKPIECE.** Use clamps or a vise to hold the workpiece when practical. A secured workpiece protects your hands and frees both hands to operate the machine.

22. **DO NOT OVERREACH.** Keep proper footing and balance at all times.

23. **MANY MACHINES WILL EJECT THE WORKPIECE TOWARD THE OPERATOR.** Know and avoid conditions that cause the workpiece to "kickback."

24. **ALWAYS LOCK MOBILE BASES (IF USED) BEFORE OPERATING MACHINERY**.

25. **BE AWARE THAT CERTAIN DUST MAY BE HAZARDOUS** to the respiratory systems of people and animals, especially fine dust. Make sure you know the hazards associated with the type of dust you will be exposed to and always wear a respirator approved for that type of dust.

Additional Safety Instructions for Planers

⚠WARNING

READ and understand this entire instruction manual before using this machine. Serious personal injury may occur if safety and operational information is not understood and followed. DO NOT risk your safety by not reading!

⚠CAUTION

USE this and other machinery with caution and respect. Always consider safety first, as it applies to your individual working conditions. No list of safety guidelines can be complete—every shop environment is different. Failure to follow guidelines could result in serious personal injury, damage to equipment or poor work results.

1. **INSTRUCTION MANUAL.** This machine presents significant safety hazards to untrained users. Read/understand this entire manual before starting the planer.

2. **REACHING INSIDE PLANER.** Never reach inside planer or remove covers when the planer is connected to power, and always stop the planer and disconnect power before removing jammed workpieces.

3. **INFEED CLEARANCE SAFETY.** The infeed roller is designed to pull material into the cutterhead. Always keep hands, clothing, and long hair away from the infeed roller during operation to prevent serious injury.

4. **BODY POSITION WHILE OPERATING.** The workpiece may kick out during operation. To avoid getting hit, stand to the side of the planer during the entire operation.

5. **PLANING CORRECT MATERIAL.** Only plane natural wood stock with this planer. DO NOT plane MDF, plywood, laminates, or other synthetic products.

6. **GRAIN DIRECTION.** Planing across the grain is hard on the planer and may cause the workpiece to kick out. Always plane in the same direction or at a slight angle with the wood grain.

7. **LOOKING INSIDE PLANER.** Wood chips fly around inside the planer at a high rate of speed. DO NOT look inside the planer or remove guards/covers during operation.

8. **CUTTING LIMITATIONS.** The planer may kick out a workpiece at the operator or be damaged if pushed beyond planing limits.

9. **CLEAN STOCK.** Planing stock with nails, staples, or loose knots MAY cause debris to kick out at the operator and WILL damage your knives when they contact the cutterhead. Always thoroughly inspect and prepare stock to avoid these hazards.

10. **DULL/DAMAGED KNIVES.** The planer may kick out a workpiece at the operator or give poor finish results if it is operated with dull or damaged knives.

11. **UNPLUGGING DURING ADJUSTMENTS.** When connected to power, the planer can be accidentally turned ***ON***. Always disconnect power when servicing or adjusting the components of the planer.

ELECTRICAL

220V Operation

The **SHOP FOX®** Model W1742 operates at 220 volts. Use a NEMA-style 6-20 plug and outlet (**Figure 2**) to connect your machine to power.

The motor supplied with your new 15" Planer is rated at 3 HP and will draw approximately 18 amps during 220 volt operation.

We recommend connecting this machine to a dedicated circuit with a verified ground, using a 20 amp circuit breaker. Never replace a circuit breaker with one of higher amperage without consulting a qualified electrician to ensure compliance with wiring codes. Otherwise you may overload the wire and plugs in the circuit.

If you are unsure about the wiring codes in your area or you plan to connect your machine to a shared circuit, you may create a fire hazard—consult a qualified electrician to reduce this risk.

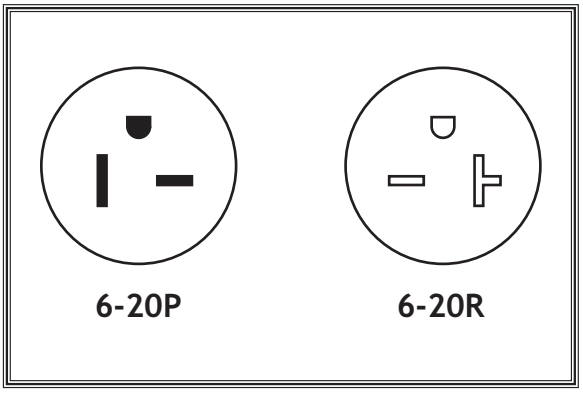

Figure 2. Typical 220V 20A 3-prong plug and outlet.

⚠WARNING

This equipment must be grounded. Verify that any existing electrical outlet and circuit you intend to plug into is actually grounded. If it is not, it will be necessary to run a separate 10 AWG copper grounding wire from the outlet to a known ground. Under no circumstances should the grounding pin be removed from any three-pronged plug or serious injury may occur.

Extension Cords

We do not recommend using an extension cord for 220V equipment. Instead, arrange the placement of your machinery and installed wiring to eliminate the need for extension cords. If you must use an extension cord, please use the following guidelines:

- Use cords rated for Standard Service
- Never exceed a length of 50 feet
- Use cords with 10 ga. wire or bigger
- Ensure cord has a ground wire and pin
- Do not use cords in need of repair

Grounding

This machine must be grounded! The electrical cord supplied with this machine does not come with a 220 volt plug. Use a plug with a ground pin. If your outlet does not accommodate a ground pin, have it replaced by a qualified electrician or have an appropriate adapter installed and grounded properly. An adapter with a grounding wire does not guarantee the machine will be grounded. A ground source must be verified.

SET UP

Unpacking

The **SHOP FOX®** Model W1742 has been carefully packaged for safe transporting. If you notice the machine has been damaged, please contact your authorized **SHOP FOX®** dealer immediately.

Inventory

The following is a description of the main components shipped with the **SHOP FOX®** Model W1742. Lay the components out to inventory them.

Note: *Some parts and hardware may already be installed on the machine. Make sure to check the machine when you use this inventory list.*

Box Inventory (Figure 3) **Qty**

A. Planer 1
B. Dust Hood 1
C. Caster Assembly 1
D. Foot Lifting Lever and Pin 1
E. Handwheel and Handle 1
F. Extension Wings 2

Hardware and Tools

- Hex Wrenches 2.5, 3, 4, 6mm 4
- Wrenches 8/10, 14/17, 17/19 3
- Knife Setting Gauge 1

- Flat Washers 8mm (Wing) 6
- Lock Washers 8mm (Wing) 6
- Hex Bolts M8-1.25 x 30 (Wing) 6
- Set Screws M8-1.25 x 20 (Wing) 4

- Cap Screws M8-1.25 x 20 (Dust Hood) 3
- Hex Bolts M6-1 x 10 (Dust Hood) 3
- Flat Washers 6mm (Dust Hood) 3
- Hex Nuts M6-1 (Dust Hood) 3

- Key 4 x 4 x 20 (Handwheel) 1
- Bushing (Handwheel) 1
- Hex Nut M12-1.75 (Handwheel) 1
- Flat Washer 12mm (Handwheel) 1

If any parts are missing, examine the packaging for the missing parts. For any missing parts, find the part number in the back of this manual and contact Woodstock International, Inc. at (360) 734-3482 or at **tech-support@shopfox.biz**

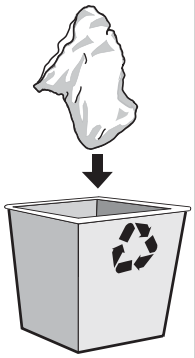

⚠WARNING

SUFFOCATION HAZARD! Immediately discard all plastic bags and packing materials to eliminate choking/suffocation hazards for children and animals.

⚠WARNING

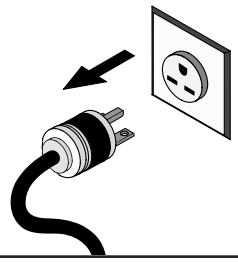

UNPLUG power cord before you do any assembly or adjustment tasks! Otherwise, serious personal injury to you or others may occur!

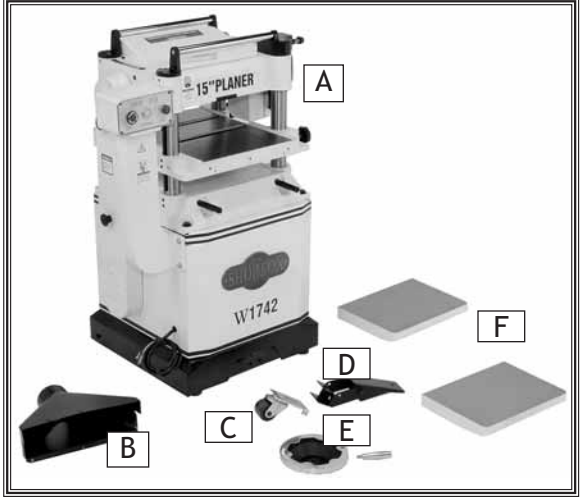

Figure 3. Inventory.

Machine Placement

- **Floor Load:** This machine distributes a heavy load in a small footprint. Some floors may require additional bracing to support both machine and operator.
- **Working Clearances:** Consider existing and anticipated needs, size of material to be processed through the machine, and space for auxiliary stands, work tables or other machinery when establishing a location for your planer.
- **Lighting:** Lighting should be bright enough to eliminate shadow and prevent eye strain.
- **Electrical:** Electrical circuits must be dedicated or large enough to handle amperage requirements. Outlets must be located near each machine, so power or extension cords are clear of high-traffic areas. Follow local electrical codes for proper installation of new lighting, outlets, or circuits.

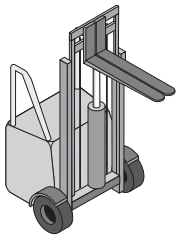

⚠WARNING

USE power lifting equipment to lift this planer. Otherwise, machine damage or serious personal injury may occur.

⚠CAUTION

MAKE your shop "child safe." Ensure that your workplace is inaccessible to youngsters by closing and locking all entrances when you are away. NEVER allow untrained visitors in your shop when assembling, adjusting or operating equipment.

Cleaning Machine

The table and other unpainted parts of your 15" Planer are coated with a waxy grease that protects them from corrosion during shipment. Clean this grease off with a solvent cleaner or citrus-based degreaser. DO NOT use chlorine-based solvents such as brake parts cleaner or acetone—if you happen to splash some onto a painted surface, you will ruin the finish.

⚠WARNING

NEVER use gasoline or other petroleum-based solvents to clean with. Most have low flash points, which make them extremely flammable. A risk of explosion and burning exists if these products are used. Serious personal injury may occur if this warning is ignored!

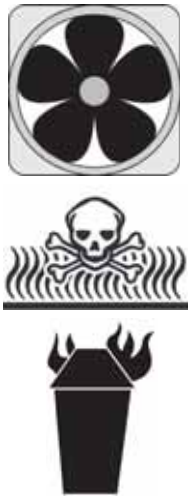

⚠CAUTION

ALWAYS work in well-ventilated areas far from possible ignition sources when using solvents to clean machinery. Many solvents are toxic when inhaled or ingested. Use care when disposing of waste rags and towels to be sure they DO NOT create fire or environmental hazards.

Cast Iron Wings

The cast iron extension wings are identical for both the infeed and the outfeed ends of the table.

To mount these wings, do these steps:

1. Clean the wing, table, wing mating surfaces, and wipe a thin film of oil on the surfaces.

2. Loosen the table-roller set screws and turn the eccentrics until the table rollers fall below the table surface. Refer to **Figure 4** for locations.

3. Install two M8-1.25 x 20 set screws into each wing. Refer to **Figure 5** for location.

4. With a helper, match the tapped holes on the side of the table to the cast iron wings and lightly secure the wings in place with the three M8-1.25 x 30 hex bolts and the 8mm lock and flat washers.

5. Place a straightedge flat across the table and across the wings as shown in **Figure 6**.

6. Adjust the M8-1.25 x 20 set screws so the wings are flush with the table.

7. Tighten the hex bolts to secure the wings in place. The top of the wings should now be completely even with the top of the table, but double-check to make sure that the wings did not move during the tightening process.

8. Treat the wing and table top surface with an anti-rust compound or light machine oil to prevent rust.

   Note: *If this is a first-time setup, DO NOT adjust the table rollers yet, you will do this adjustment later.*

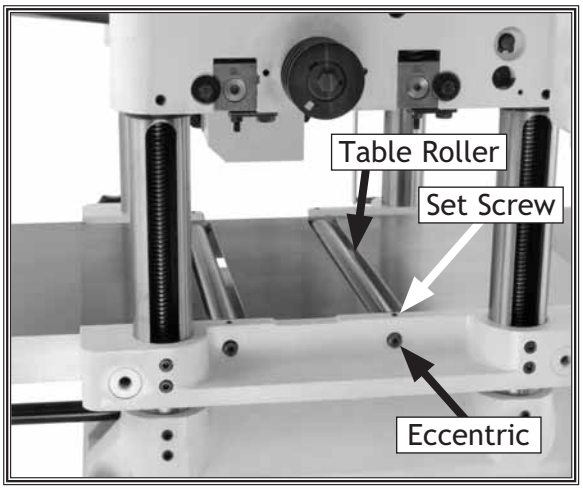

Figure 4. Table roller adjustment locations.

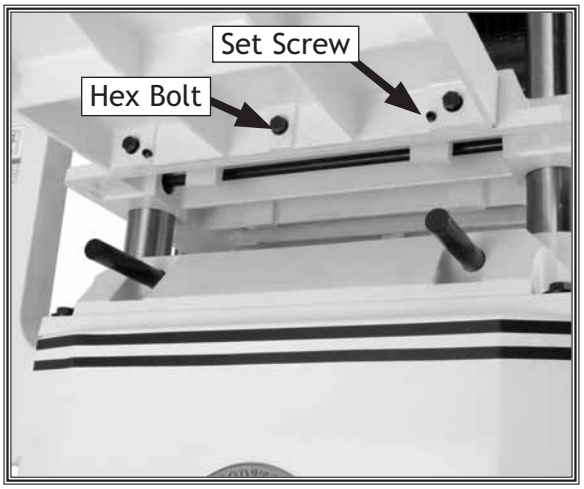

Figure 5. Extension wing installed.

Figure 6. Setting wing height.

Handwheel

The handwheel operates a chain drive system that raises and lowers the table.

To mount the handwheel, do these steps:

1. Place the bushing on the handwheel shaft and insert the key into the shaft keyway.

2. Screw the handle into the handwheel, place the handwheel on the shaft and secure it with the hex nut and flat washer, as shown in **Figure 7**.

Figure 7. Handwheel installation.

Dust Hood

The dust hood included should only be installed if you plan on hooking your planer up to a dust collection system.

To install the dust hood, do these steps:

1. Match the holes in the dust hood to the tapped holes in the planer casting on the outfeed end and install the three M8-1.25 x 20 cap screws.

2. Secure the top of the dust hood with the M6-1.0 x 12 hex bolts flat and lock washers (see **Figure 8**).

Figure 8. Dust hood installed.

Caster and Foot Jack

To install the caster and foot jack, do these steps:

1. Remove the pin and hex bolt that are already mounted in the foot pedal bracket.

2. Align the caster assembly with the mounting holes in the foot pedal bracket.

3. Insert the hex bolt into the hole in the back side of the caster assembly, and tighten the bolt just enough for it to be snug without hampering the pivot action of the caster.

4. Attach the foot pedal to the caster and secure together by inserting the pin between the two parts.

5. Lock the caster and pedal (**Figure 9**) in place with the E-clip and washers.

Figure 9. Caster installed.

Table Roller Adjustment

If the table rollers are out of square with one another in the vertical plane, or they are out of square with the table surface, the workpiece will chatter, rotate, or hang during planing. Take the time to do this adjustment perfectly.

The required height of the table rollers will vary depending on the type of stock you intend to plane.

As a general rule, table roller height should be between 0.002" and 0.020" above the table (see **Figure 10**). However, some stock may have better results outside of these numbers. Often, a small amount of trial-and-error is required to find the best table roller height for any particular stock. Rough stock will plane better when the rollers are higher, and smooth stock will have less snipe when the rollers are lower.

To adjust the table rollers, do these steps:

1. Loosen the eccentric set screws shown in **Figure 11**.

2. Using a straightedge and wrench, raise the rollers on their eccentric shafts 0.002" to 0.020" above the table surface **Figure 12**.

3. Tighten the eccentric set screws and recheck the roller height, and readjust if required.

   Note: *For quick and easy table roller setup, consider purchasing a Rotacator. This handy tool allows you to watch the height of the table roller as you adjust it, giving you accuracy within 0.001" every time.*

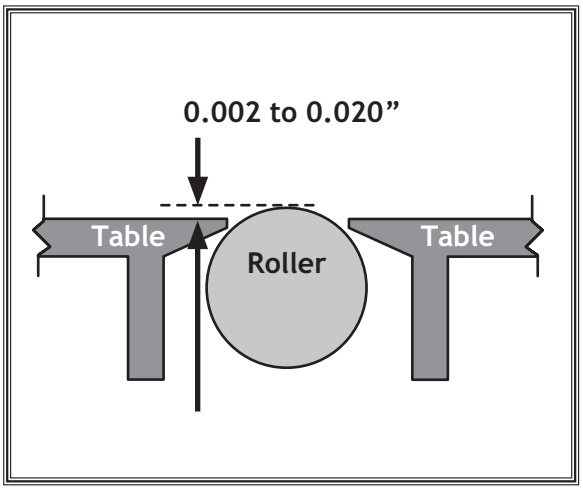

Figure 10. Table roller height principle.

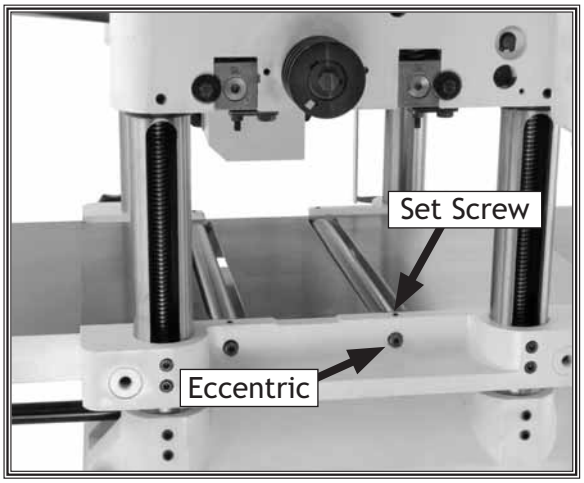

Figure 11. Roller set screws.

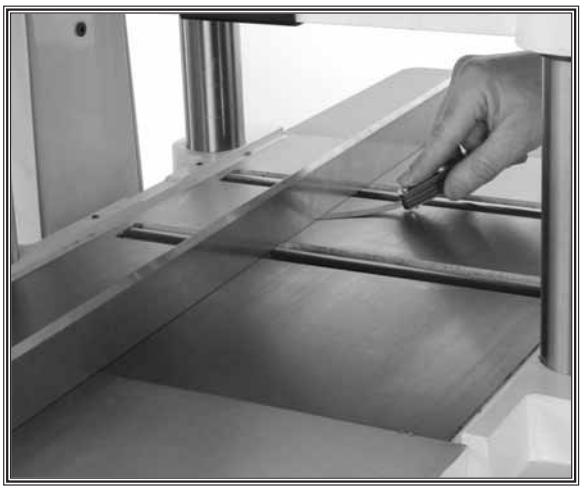

Figure 12. Checking roller height.

Checking for Oil

To check the gearbox oil level:

1. Wipe dirt from the gearbox fill plug and remove it (**Figure 13**).

   —If the oil runs out, the gearbox is full, and reinstall the plug.

   —If the oil does not run out, fill the gearbox until it does, and reinstall the plug.

Note: *Replace the gearbox oil after the first 20 hours of operation. This is a normal break-in procedure.*

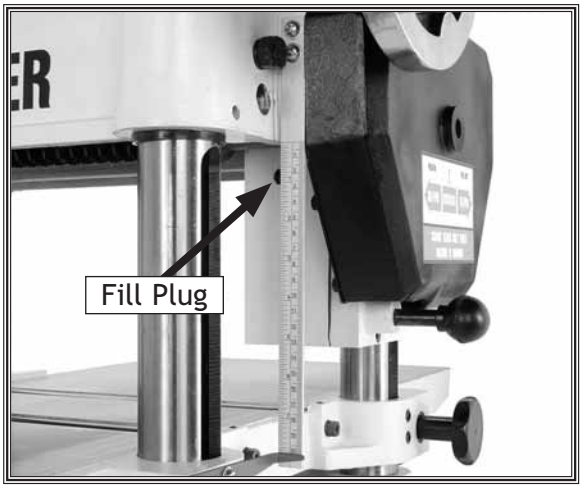

Figure 13. Gearbox Fill Plug.

Test Run

Before starting the machine for the first time, check the gearbox oil level, make sure you have read through the entire manual, and make sure you have performed all required assembly and adjustments. Make sure there are no safety hazards and tools used to assemble/adjust the machine are cleared away.

1. Lower the table enough to provide plenty of room for the safe operation of the feed rollers and the cutterhead.

2. Press the START button. Make sure that you remain near the switch in case you have to press the STOP button in an emergency.

3. Pay attention for unusual noises and vibration. if any problem is found, investigate it and correct it before operating the machine any further.

⚠WARNING

Always wear safety glasses when operating the planer. Failure to comply with this warning may result in serious personal injury.

⚠WARNING

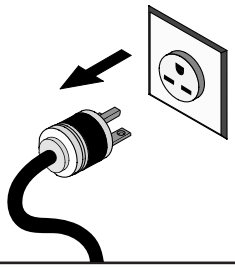

DO NOT investigate problems or adjust the planer while it is running. Wait until the machine is turned off, unplugged and all working parts have come to a complete stop before proceeding!

OPERATIONS

General

The Model W1742 will perform many types of operations that are beyond the scope of this manual. Many of these operations can be dangerous or deadly if performed incorrectly.

The instructions in this section are written with the understanding that the operator has the necessary knowledge and skills to operate this machine. **If at any time you are experiencing difficulties performing any operation, stop using the machine!**

If you are an inexperienced operator, we strongly recommend that you read books, trade articles, or seek training from an experienced planer operator before performing any unfamiliar operations. **Above all, your safety should come first!**

⚠WARNING

READ and understand this entire instruction manual before using this machine. Serious personal injury may occur if safety and operational information is not understood and followed. Ensure safety and read this manual!

⚠WARNING

Always wear safety glasses when operating the planer. Failure to comply with this warning may result in serious personal injury.

⚠WARNING

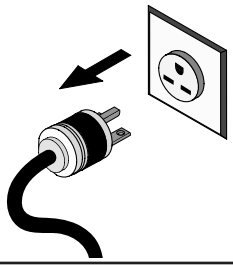

DO NOT investigate problems or adjust the planer while it is running. Wait until the machine is turned off, unplugged and all working parts have come to a complete stop before proceeding!

Feed Rate

NOTICE

The machine must be running in order to change the feed rate. Never change the feed rate while the planer is operating, otherwize damage to the gearbox will occur.

The feed rate is the speed that the rollers drive the workpiece through the planer. The Model W1742 features 16 and 30 FPM feed rates.

As a general rule, the faster feed rate will dimension lumber quicker but leave a rougher finish; the slower feed rate will have the opposite effect and leave a smoother finish. Often, a small amount of trial-and-error will be the best way to determine which setting is right for your particular application.

To change the feed roller speed, locate the feed rate knob shown in **Figure 14**. The machine must be running in order to change speeds; however, you should NEVER be planing stock through the machine when you switch speeds. Start the planer and adjust the knob as illustrated in **Figure 15**.

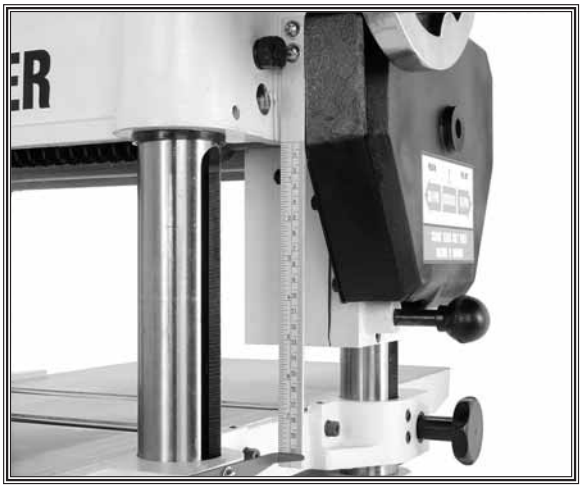

Figure 14. Feed knob location.

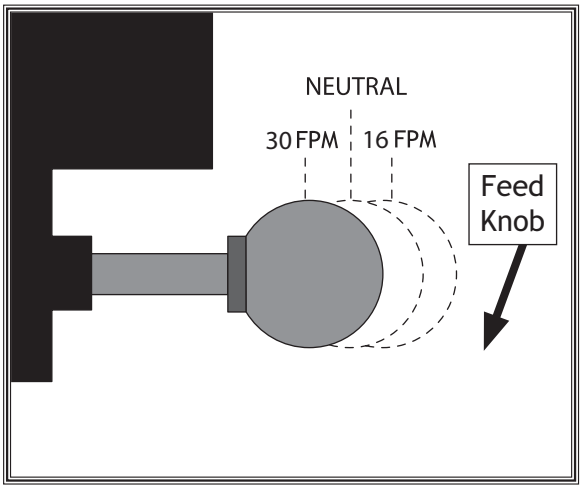

Figure 15. Feed positions.

Operational Tips

- Carefully inspect any lumber that you plan to run through the planer. Each board must have at least one flat surface to slide along the planer table. To create a flat surface, pass the stock over a jointer first. See **Figure 16.** Some defects such as moderate twisting, loose knots or severe cracks may make the stock unusable.

- Only use clean stock. See **Figure 17.** Scrape off all glue from joined boards before planing. Remove all dirt, nails, staples, imbedded gravel, etc. from any lumber you plan on using. A hidden nail in a workpiece will instantly damage the sharp edges of the knives. This will cause unsatisfactory results in future operations.

- Plane ONLY natural wood fiber. Never plane wood composites such as particle board, plywood or MDF. Never plane laminates, laminant, or other synthetic materials.

- Surface wood in the same direction as the grain. Never feed end-cut or end-grained lumber into the planer.

- Keep your work area clear. Always make sure that long workpieces are supported and have enough room to exit the planer.

- When making multiple passes with long stock, use the top rollers to move material back to the infeed side of the planer.

- Avoid planing wood with a high moisture content. Stock with more than 20% moisture, or stock that has been exposed to rain or snow, will plane poorly and cause unnecessary wear on the knives and motor. Excess moisture may also cause rust or corrosion problems.

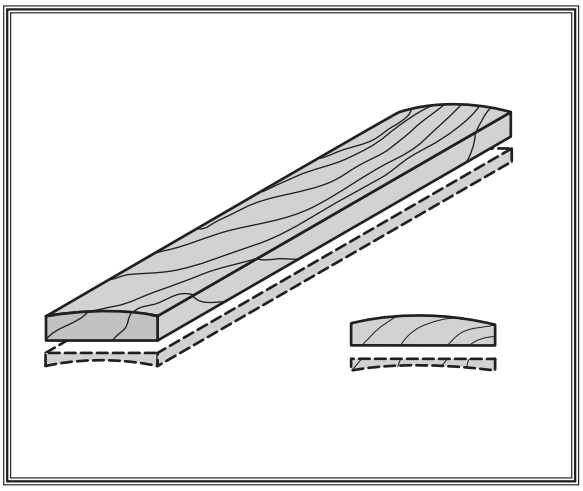

Figure 16. Cupped board corrected.

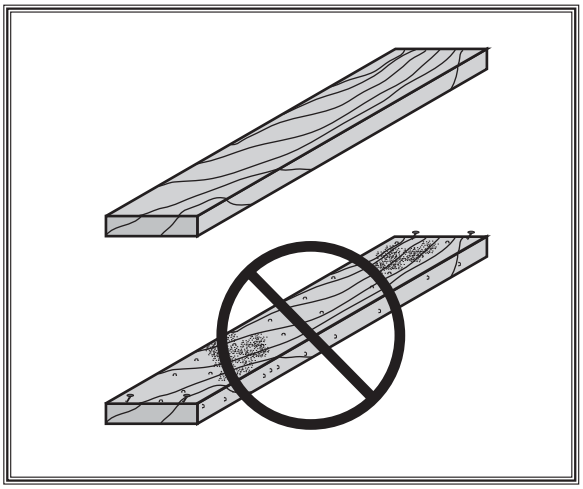

Figure 17. Good and poor lumber.

MAINTENANCE

General

Regular periodic maintenance on your **SHOP FOX®** Model W1742 will ensure its optimum performance. Make a habit of inspecting your machine each time you use it.

Check for the following conditions and repair or replace when necessary:

- Loose mounting bolts.
- Worn switch.
- Worn or damaged cords and plugs.
- Damaged V-belt.
- Any other condition that could hamper the safe operation of this machine.

⚠WARNING

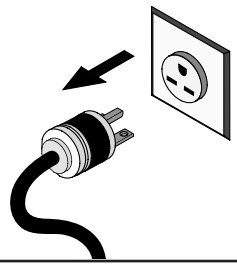

MAKE SURE that your machine is unplugged during all maintenance procedures! If this warning is ignored, serious personal injury may occur.

Cleaning

Frequently remove sawdust with compressed air. This is especially important for the internal working parts and motor. Dust build-up is a sure way to decrease machine and motor life. If any essential lubrication is removed during cleaning, relubricate those areas.

Table and Base

Tables can be kept rust-free with regular applications of products like SLIPIT®. For long term storage you may want to consider products like Boeshield T-9™.

Basic Adjustment Tools

We have provided a jig to make the knife setting process easy and quick. Please refer to **Figure 18** for jig component identification while assembling.

To assemble the knife setting jig:

1. Snap one of the E-clips over the notch on one end of the knife setting rod.
2. Slide the aluminum knife setting jig saddles onto the rod.
3. Snap the other E-clip on the other end of the knife setting rod.

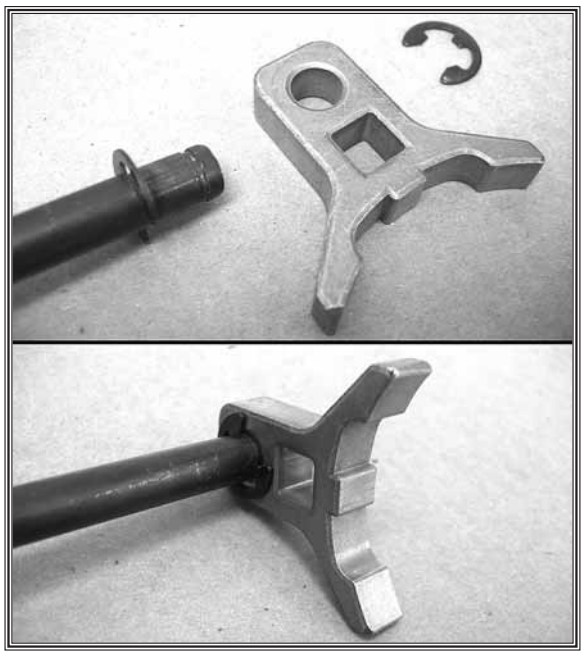

Figure 18. Provided Knife setting gauge.

Optional Adjustment Tools

To make the setup process easier and more accurate, many woodworkers purchase optional aftermarket products like the **Rotacator®** and the **Planer Pal®**.

- **Rotacator** — A rotating dial indicator on a magnetic base. This handy device allows you to set your table within 0.001" from being parallel with the cutterhead. The Rotacator is indispensable when adjusting the chip breaker, table rollers, feed rollers, and measuring table roller protrusion shown in **Figure 19**.
- **Planer Pal** — Using powerful neodymium magnets, Planer Pal (**Figure 20**) hold knives in place while freeing both hands to tighten the gib. Place one of these jigs on each end of the cutterhead, and you can set the knives in perfect alignment every time.

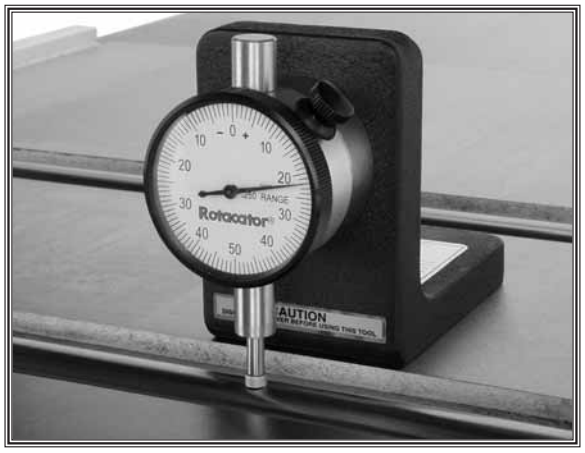

Figure 19. Rotacator measuring table roller protrusion.

Figure 20. Planer Pal jigs holding knives for superior adjustment.

Lubrication

Since all bearings are sealed and permanently lubricated, leave them alone until they need to be replaced. Do not lubricate them.

The Model W1742 does need lubrication in other places.

- **Columns and Lead Screws**: Lubricate columns weekly with light oil, and lubricate the four lead screws once a month with general purpose grease.
- **Worm Gear**: Inspect the worm gear monthly and lubricate when needed. The worm gear box will need to be removed to perform the inspection (see **Figure 21**).
- **Chain**: Inspect the table height adjustment chain monthly and lubricate as needed. Use high quality chain lubricant for best results.
- **Gear Box**: Drain the gear box after the first 20 hours of operation. **Figure 22** shows the gear box drain and fill plugs. Refill with 80-90W gear oil. The oil level should reach the top of the filler plug port. After the initial change, inspect fluid levels periodically and change yearly. *If your planer receives heavy use, change the gear oil more frequently.*
- **Drive Chain**: Inspect and lubricate the drive chain monthly. Check the sprockets, the chain, and the master links during inspection. Use a general purpose grease to lubricate the chain.
- **Feed Rollers**: Lubricate feed rollers daily before start-up. **Figure 23** shows the lubrication points for the feed rollers. These are screws that have holes drilled through them to allow oiling. Make sure that dust is not trapped in these screws and apply two drops of light oil in each to penetrate the bearings. Do not lubricate more than this or the excess will end up on the floor.

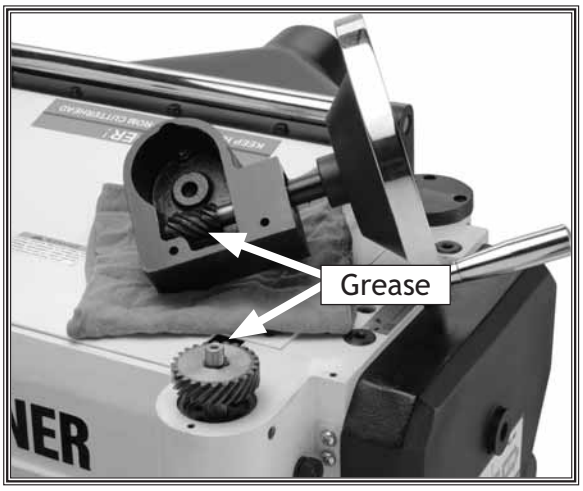

Figure 21. Worm gear lubrication.

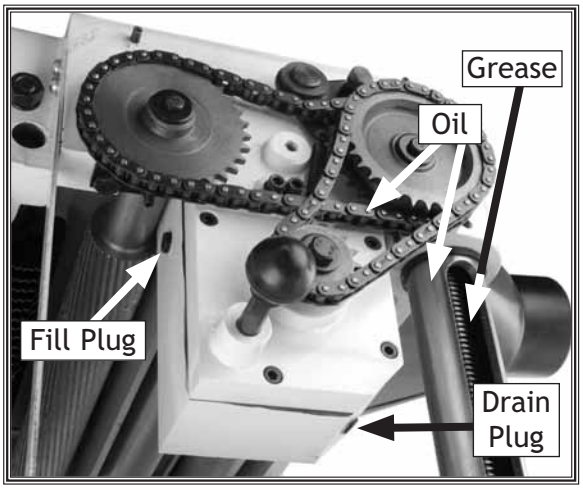

Figure 22. Gear box lubrication.

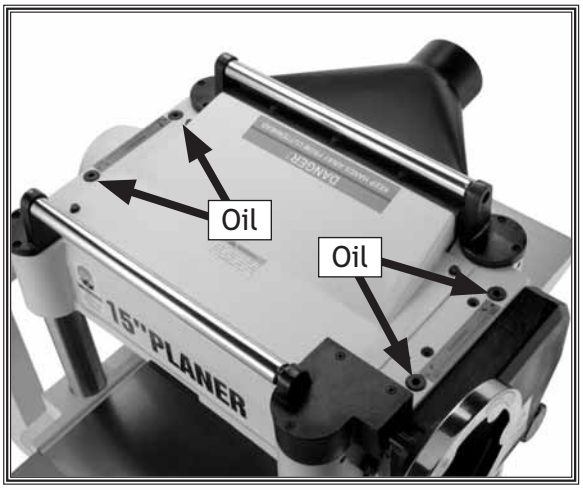

Figure 23. Feed roller lubrication.

Anti-Kickback Pawls

The Model W1742 features anti-kickback pawls (shown in **Figure 24**) as an important safety feature. These safety devices allow the workpiece to enter the planer without affecting the proper operation, but are designed to stop the workpiece from coming back out of the entrance in the event of a kickback.

The anti-kickback pawls should be frequently checked to ensure that they swing free and easy. Do not try to lubricate the pawls. Lubrication may cause dust to build-up, which will restrict movement.

⚠CAUTION

Proper operation of the anti-kickback pawls is essential to the safe operation of the planer. If they aren't working properly, they will not protect you if a kickback occurs.

Figure 24. Anti-kickback pawls.

Belt Tension

Frequently inspect the V-belt tension during the first twenty hours of operation. During this period, the belts will stretch a little and MUST be retightened.

To adjust belt tension, lower the motor slightly by loosening the lower check nuts shown in **Figure 25**. When belt tension is satisfactory, tighten the upper check nuts down onto the motor bracket to secure it.

DO NOT over-tighten the check nuts—too much pressure at the wrong angle may break the motor-mount.

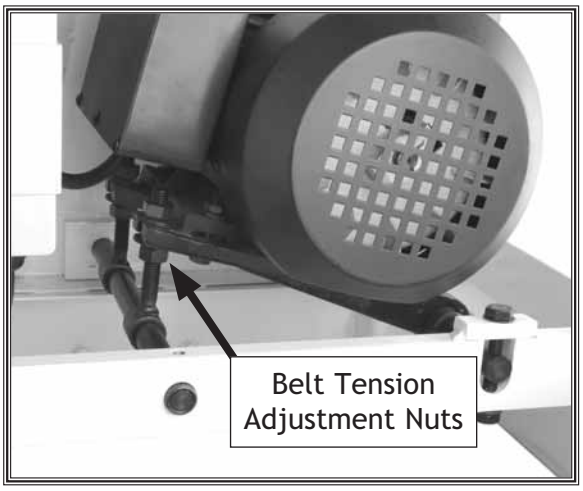

Figure 25. Belt tension adjustment.

Pulley Alignment

The V-belt pulleys should be properly aligned with each other to prevent premature belt wear. Check the alignment with a good quality straightedge as shown in **Figure 26**.

To align the pulleys, do these steps:

1. Loosen the belt tension adjustment nuts so the motor will freely move up and down.
2. Loosen, but do not remove, the four bolts that secure the motor to the motor mounting plate.
3. Slide the motor as needed to align the pulleys.
4. When the pulleys are aligned, tighten the four motor mount bolts.
5. Tension the V-belts and replace the belt cover.

Figure 26. Belt alignment.

Knife Replacement (Jack Screw Style)

The Model W1742 Planer is equipped with both springs and jack screws for knife adjustment. Springs allow adjustments to be made quickly, while jack screws are more accurate. Choose either method that meets your needs. Jack screws support the knives from underneath. By threading the jack screws in or out, you can precisely control the knife height. See **Figure 27** for identification.

⚠CAUTION

WEAR thick gloves when working near planer knives. Otherwise you can be severely cut!

To replace and adjust the knives using the jack screws, do these steps:

1. UNPLUG THE PLANER!
2. Loosen the gib bolts and remove the gib and old knives.
3. Remove all of the springs and keep them in a safe place for later optional use.
4. Clean the gib and knife groove in the cutterhead.
5. Place the new knives, gibs, and gib bolts back in the cutterhead as they were before removal. Make sure the knives are resting on the jack screws when you install them.
6. Place the knife setting jig on the cutterhead so both feet sit solidly on the body of the cutterhead.

   —If the knife does not allow the jig to sit on the cutterhead evenly, raise or lower the knife with the jack screws to adjust as needed.
7. Lightly snug the gib bolts (**Figure 28**) to hold the knife in position.
8. Tighten the knives by following the **Knife Tightening** instructions on **Page 26**.

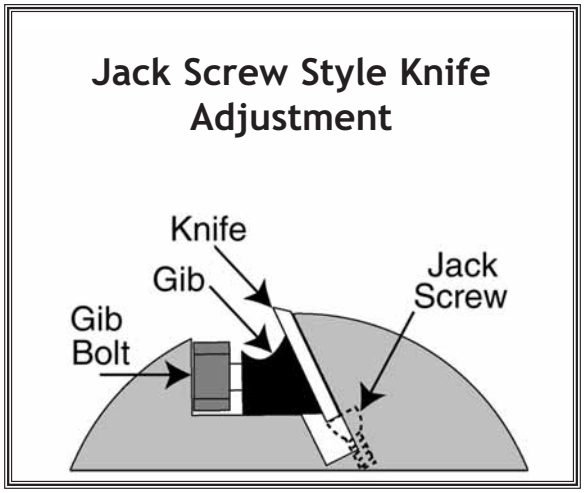

Figure 27. Jack screw system.

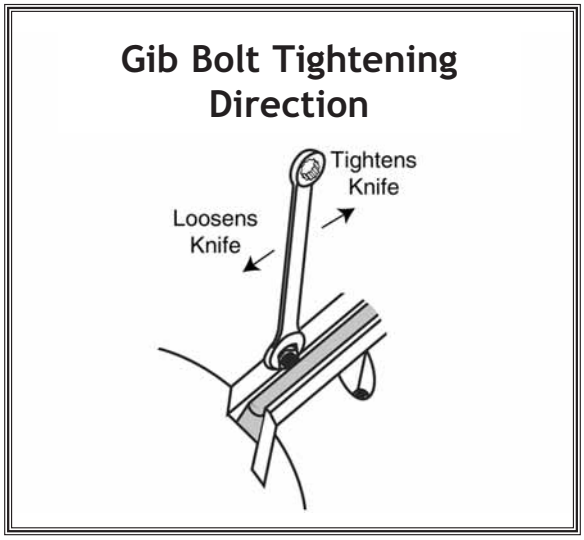

Figure 28. Gib tightening.

Knife Replacement (Spring Style)

The Model W1742 Planer is equipped with both springs and jack screws for knife adjustment. Springs allow adjustments to be made quickly, while jack screws are more accurate. Chose either method that meets your needs. Springs exert upward pressure under the knives while wedge-type gibs and gib bolts lock the knives in place. See **Figure 29** for cutterhead assembly identification.

⚠CAUTION

WEAR thick gloves when working near planer knives. Otherwise you can be severely cut!

To replace and adjust the knives using the springs, do these steps:

1. UNPLUG THE PLANER!
2. Lower the jack screws completely to get them out of the way.
3. Remove the gib bolts, gibs, and the old knives. place for later optional use.
4. Clean the gib and knife groove in the cutterhead.
5. Install the new knives.
6. Install the gibs, and lightly install the gib bolts so the knife will slide upward from spring pressure.
7. Place the knife setting jig on the cutterhead so both feet sit solidly on the cutterhead and so that the center of the jig pushes down on the knife.
8. Place equal pressure on both ends of the jig so the jig is parallel with the cutterhead, and the knife is set.
9. Lightly snug gib bolts (**Figure 30**) to hold the knife in position.
10. Tighten the knives by following the **Knife Tightening** instructions on **Page 26**.

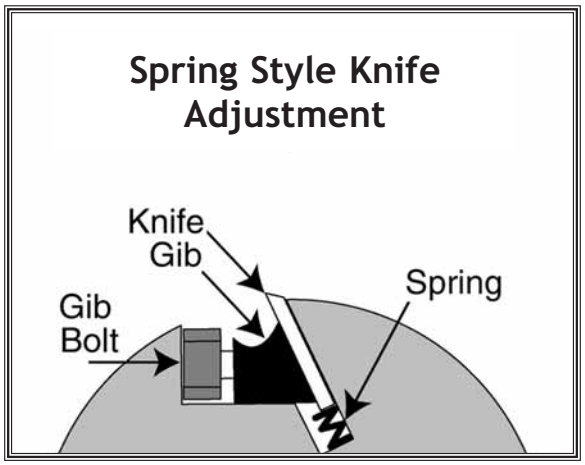

Figure 29. Spring system.

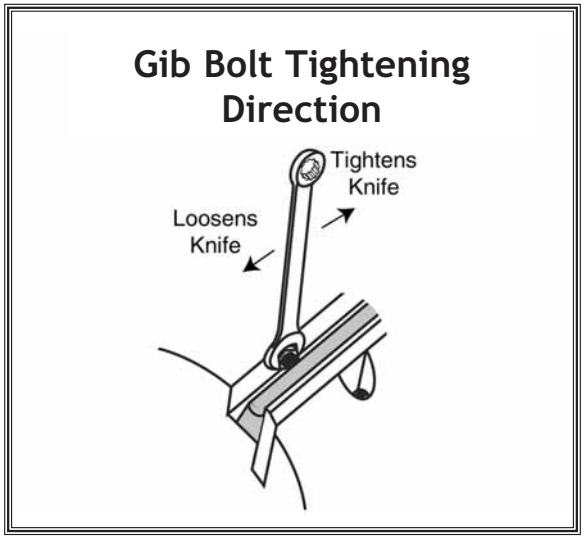

Figure 30. Gib tightening.

Knife Tightening

To tighten the knives after adjustment, do these steps:

1. UNPLUG THE PLANER!

2. Alternating back-and-forth, lightly snug the gib bolts by following the tightening sequence shown in **Figure 31,** but **DO NOT** tighten the bolts completely.

3. Rotate the cutterhead to the next knife and repeat **Step 2**, and then repeat again with each knife. When all knife gib bolts have been snugged, and you come back to the knife you started with, check the knife height with the jig to make sure that it is still set correctly.

— If the height is incorrect, readjust as necessary and re-snug the gib bolts.

— If the height is correct, snug each bolt down a little more in the same alternating method as in **Step 2,** but **DO NOT** tighten the bolts completely. Repeat this tightening sequence again with each knife.

4. When you return to the original knife, tighten all gibs completely in the same fashion, repeating on all knives.

5. Recheck the knife height on all knives with the jig to make sure that the height is still correct.

— If the height is incorrect, repeat **Steps 2** through **5** until correct.

NOTICE

Uneven tightening or over-tightening the gib bolts may warp the cutterhead, causing it to become unbalanced, which will lead to premature knife and bearing wear from vibration.

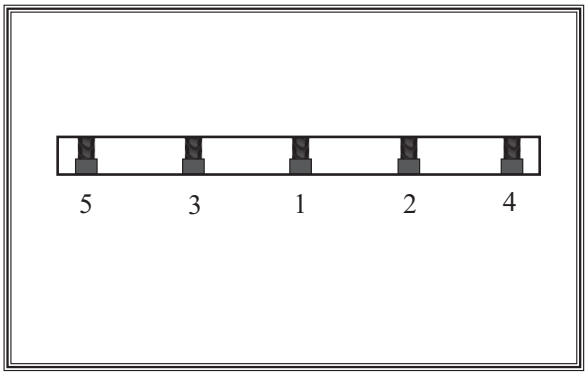

Figure 31. Knife tightening sequence.

Table Adjustment

The table has been pre-set at the factory, but it is a good idea to check any machine thoroughly before use.

There are two directions you should be concerned about. When checking/adjusting the table, the table should be parallel with the head casting from front-to-back, and the table should be parallel with the cutterhead body from side-to-side.

To check the table, do these steps:

1. MAKE SURE MACHINE IS UNPLUGGED!

2. Use the plans shown in **Figure 32** to make a wooden gauge block.

3. Place the block on one end of the table, directly under the cutterhead body. Raise the table up so the block only touches the cutterhead body (keep knives rotated out of the way for this step).

4. Without moving the table, slide the block of wood to the other end of the cutterhead. If the block of wood will not fit, or if the block is below the cutterhead body, measure this gap with a feeler gauge. If the difference is more than 0.002", then the table needs to be adjusted from left to right.

5. Place the block under the front of the head casting, to either side of the depth limiter tab. Raise the table up so the block barely touches the head casting as shown in **Figure 33**.

6. Remove the block and place it between the middle-rear of the head casting and the table. If there is a gap or it will not fit under the head casting, measure the difference with a feeler gauge. If this measurement is more than 0.002", then the table needs to be adjusted from front to back.

7. There are two methods to adjust the table on the Model W1742. The first is for adjustments smaller than 0.016" and the second is for adjustments larger than 0.016".

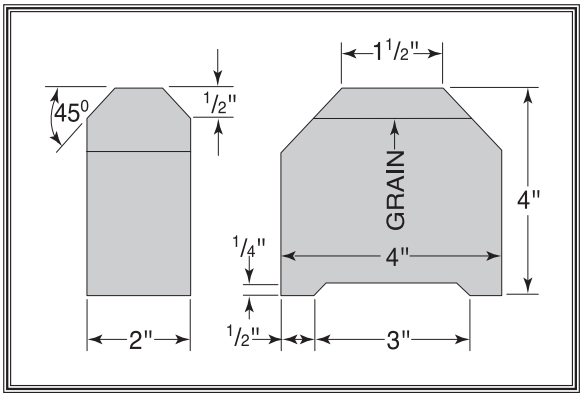

Figure 32. Gauge block plans.

Figure 33. Block position.

To adjust the table more than 0.016", do these steps:

1. Remove the side cabinet plate.

2. On the underside of the table there is a chain drive and five sprockets as shown in **Figure 34**. The four sprockets in the corners control the movement of the table columns. The fifth sprocket is the idler sprocket that controls the chain tension. Loosen the two bolts on the idler sprocket bracket (**Figure 34**) to loosen the chain so that each sprocket can be rotated on its own. Make sure to hold the chain away from the sprocket while you adjust it.

3. Moving the sprockets clockwise lowers the table and moving them counterclockwise raises the table. Each tooth on the corner sprockets equals 0.016" of vertical movement when the cogs are turned (See illustration in **Figure 35**). Make sure, as you adjust each sprocket, that you count the number of teeth that pass a fixed point.

4. After you have the table adjusted to within 0.016" from front-to-back and from side-to-side, tighten the chain so all of the slack is removed.

5. Now follow the next instructions for adjusting the table when it is less than 0.016" from its proper position.

To adjust the table less than 0.016", do these steps:

1. Use the table mounting screws shown in **Figure 36**. Loosen the screws and lift/lower the table until the table and the cutterhead body are parallel with each other and the table is parallel with the head casting from front to back. This may require some trial and error.

2. Adjust each column on both sides until the table is properly set. While adjusting the columns, tighten each screw after each step to ensure accurate results.

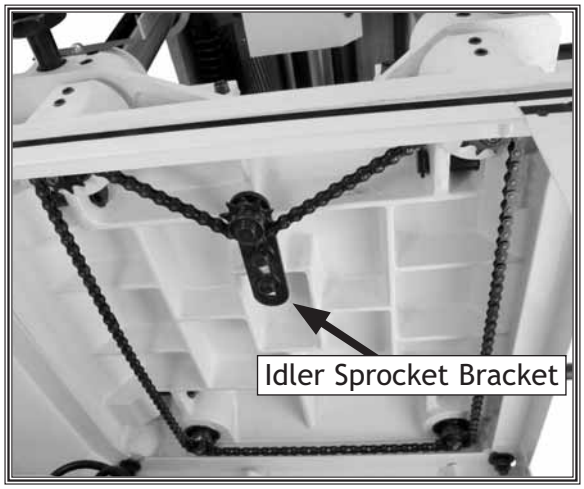

Figure 34. Chain drive system.

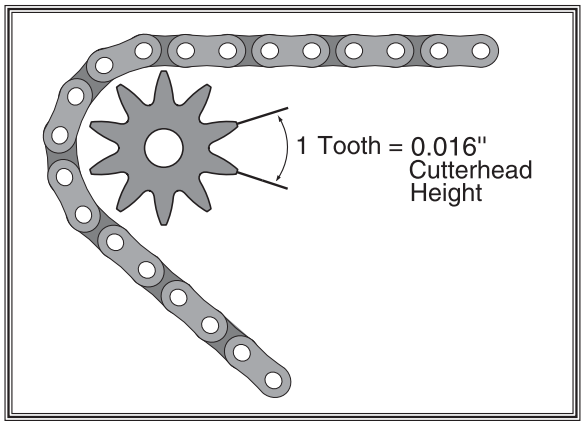

Figure 35. Sprocket ratio.

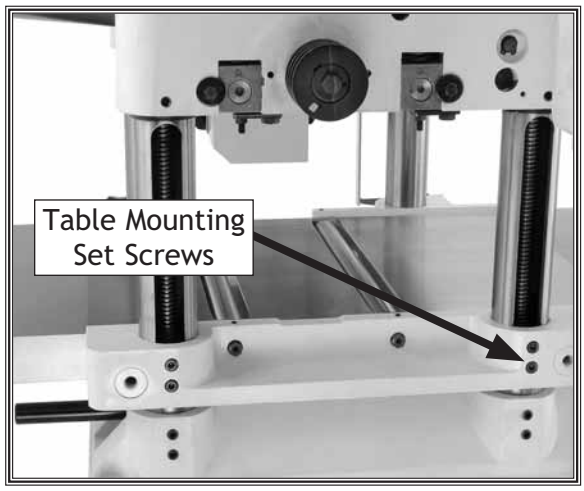

Figure 36. Table mounting screws.

Feed Roller and Chip Breaker Adjustment

To perform this adjustment accurately, you will need a dial indicator or Rotocator (not included).

The feed rollers and the chip breaker are factory set for general planing. If you need to alter the settings or reset them after maintenance, these components can be adjusted at the same time, assuming that the knife height is set correctly.

The standard setting for the infeed roller and the chip breaker is 0.004"-0.008" below the cutterhead knife at BDC (bottom dead center). The outfeed roller should be set an additional 0.020" below the cutterhead.

To adjust the feed rollers and the chip breaker, do these steps:

1. DISCONNECT THE MACHINE FROM POWER!

2. Loosen four table roller set screws shown in **Figure 37**, and use a wrench to turn the eccentrics and lower the rollers below the table surface.

3. Rotate the cutterhead with the V-belt pulley so one of the knives is at BDC as shown in **Figure 38**.

   Note: *This lowest point of knife sweep can be found with a Rotocator as shown in **Figure 38**, or it can be found using the gauge boards and listening and feeling when the knife just touches the gauge board as the knife sweeps at its lowest point.*

4. Cut two gauge boards that are the same height and are long enough to span the entire length of the table (see **Figure 39**).

5. Place each board across the entire length of the table as shown in **Figure 39**.

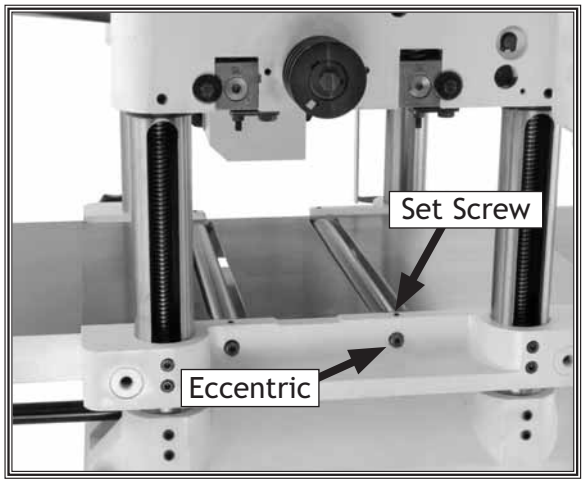

Figure 37. Table roller adjustment.

Figure 38. Finding BDC of cutterhead.

Figure 39. Gauge boards installed.

6. Raise the table up until the boards barely touch the knife edge that is at BDC.

7. Lower the feed rollers onto the boards with the adjustment stud shown in **Figure 40**.

8. Lower the chip breaker onto the boards, using the adjustment set screws shown in **Figure 41**.

   Note: *Make sure that both the feed roller and the chip breaker adjustments are backed off enough so when the table is lowered to the appropriate level, the feed rollers and the chip breaker will follow the table downward below their current position.*

9. Place the dial indicator or Rotocator against the headstock directly above the table.

10. Position the indicator plunger on the table and lower the table 0.004"-0.008".

11. Lock the infeed roller and the chip breaker in place. They should now all be set between 0.004"-0.008" below the knife edge when it is at BDC.

    Note: *The outfeed roller should still be able to move downward with the table for the final adjustment.*

12. Continue lowering the table another 0.012" (0.008" + 0.012" = 0.020"), lock the outfeed roller in place and remove the gauge boards. The outfeed roller should now be set to approximately 0.020" below the knife edge at BDC.

13. Use a wrench and raise the rollers on their eccentric shafts 0.002" to 0.020" above the table surface (**Figure 42**).

14. Tighten the eccentric set screws shown in **Figure 37**, recheck the roller height, and readjust if required.

    Note: *If the table rollers are out of square with one another in the vertical plane, or they are out of square with the table surface, the workpiece will chatter, rotate, or hang during planing. Take the time to do this adjustment perfectly.*

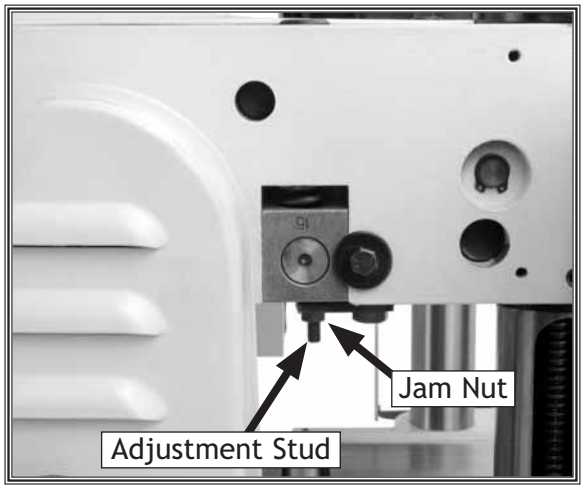

Figure 40. Feed roller height adjustment.

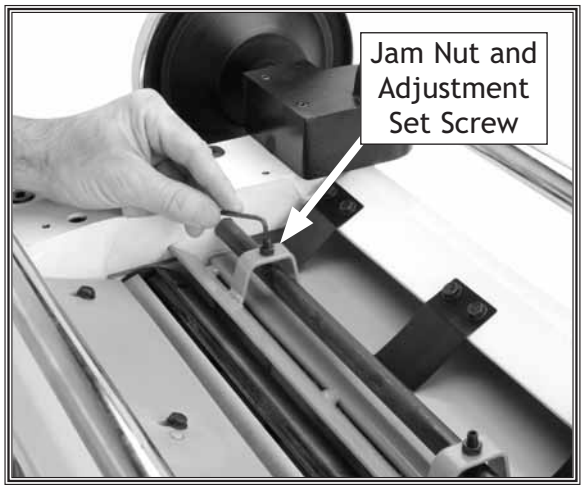

Figure 41. Chip breaker height adjustment.

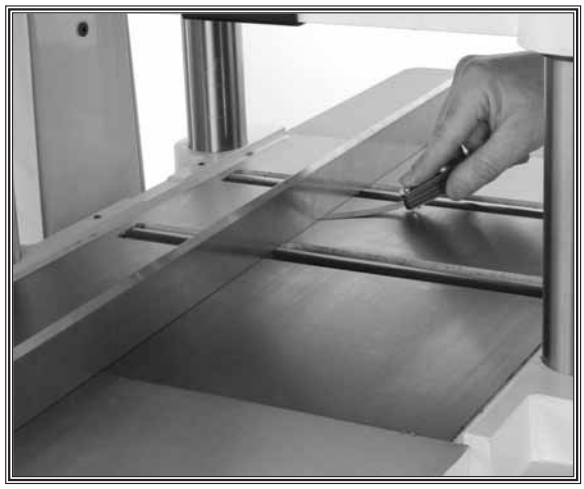

Figure 42. Setting table roller height.

Roller Spring Tension

Roller spring tension must be adjusted so that roller pressure is uniform. Roller spring tension will vary, depending on the type of wood you plane. This is usually determined from trial-and-error.

Generally speaking, less spring tension is more forgiving on workpieces. Therefore, if you primarily plane milled lumber with relatively consistent surfaces, you can get away with having less spring tension. Likewise, if you primarily plane rough lumber with inconsistent surface heights, more spring tension is a must to keep the workpiece feeding through the planer without stopping.

If workpieces regularly stop feeding during operation, it may be a sign of weak spring tension.

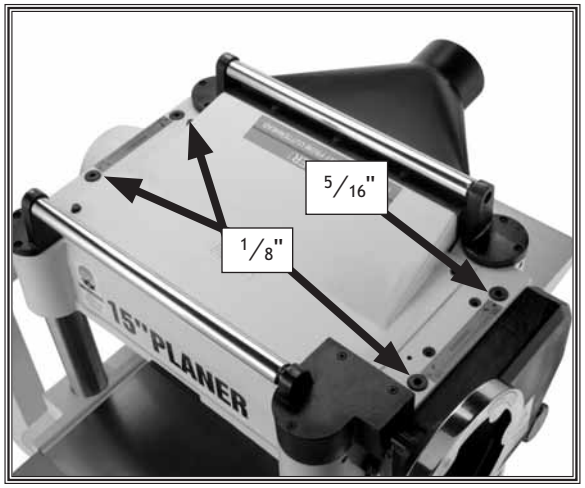

Figure 43. Roller spring tension plug protrusion.

To adjust roller spring tension, do these steps:

1. Locate the four adjustment screws located on the top of the planer, as shown in **Figure 43**.

2. Adjust tension screws so they protrude to the value shown in **Figure 43**.

Chip Deflector

A chip deflector is mounted behind the cutterhead to keep wood chips from falling onto the outfeed roller.

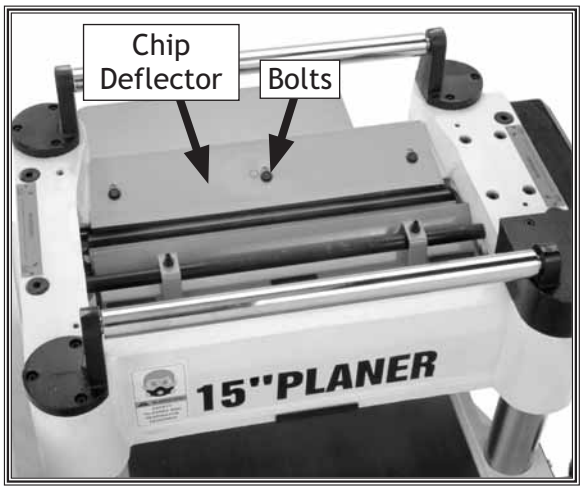

Figure 44. Chip deflector.

To adjust the chip deflector, do these steps:

1. Loosen the chip deflector mounting bolts shown in **Figure 44**.

2. Make sure the deflector is angled toward the cutterhead.

   —If a dust collector is used, adjust the gap between the deflector and the knife edge to 1/4".

   —If a dust collector is not used, adjust the gap between the deflector and the knife edge to 1/16".

3. Rotate the cutterhead by hand using the V-belt pulley and make sure there is enough clearance between all the knives and the chip deflector.

4. Re-tighten the mounting bolts and replace the top cover.

Troubleshooting

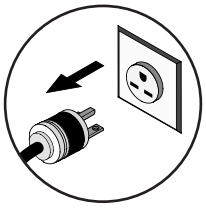

This section covers the most common problems and corrections with this type of machine. **WARNING! DO NOT make any adjustments until power is disconnected and moving parts have come to a complete stop!**

Symptom	Possible Cause	Possible Solution
Motor will not start.	1. Thermal overload relay inside magnetic switch has tripped. 2. Low voltage. 3. Open circuit in motor or loose connections.	1. Press the RESET button on the thermal overload relay; investigate reason it tripped to prevent future problems. 2. Check power line for proper voltage. 3. Inspect all lead connections on motor for loose or open connections.
Fuses or circuit breakers blow.	1. Short circuit in line cord or plug.	1. Repair or replace cord or plug for damaged insulation and shorted wires.
Motor fails to develop full power (output of motor decreases rapidly with decrease in voltage at motor terminals).	1. Power line overloaded with lights, appliances, and other motors. 2. Undersized wires or circuits too long. 3. Motor run capacitor at fault.	1. Reduce load on power line. 2. Increase wire sizes or reduce length of the circuit. 3. Replace run capacitor.
Motor overheats.	1. Motor overloaded during operation. 2. Air circulation through the motor restricted.	1. Reduce cutting load; take lighter cuts. 2. Clean out motor to provide normal air circulation.
Motor stalls or shuts off during a cut.	1. Motor overloaded during operation. 2. Thermal overload protection tripped in magnetic switch. 3. Short circuit in motor or loose connections. 4. Circuit breaker tripped.	1. Reduce cutting load; take lighter cuts. 2. Press the RESET button on the thermal overload relay, located inside the magnetic switch. 3. Repair or replace connections on motor for loose or shorted terminals or worn insulation. 4. Install correct circuit breaker; reduce # of machines running on that circuit.
Cutterhead slows or squeals when cutting, especially on start-up.	1. V-belt loose. 2. V-belt worn out.	1. Tighten V-belt (**Page 23**). 2. Replace V-belt (**Page 23**).
Loud repetitious noise coming from machine.	1. Pulley setscrews or keys are missing or loose. 2. Motor fan is hitting the cover. 3. V-belts are damaged.	1. Inspect keys and setscrews. Replace or tighten if necessary. 2. Adjust fan cover mounting position, tighten fan, or shim fan cover. 3. Replace V-belts (**Page 23**).
Vibration when running or cutting.	1. Loose or damaged blade. 2. Damaged V-belt. 3. Worn cutterhead bearings.	1. Tighten or replace blade. 2. Replace. 3. Check/replace cutterhead bearings.
Table move down while planing.	1. Dull knives. 2. Table is loose.	1. Sharpen or replace. 2. Lock knobs are loose. or replace lock mechanism.

Troubleshooting

Symptom	Possible Cause	Possible Solution
Excessive snipe (gouge in the end of the board that is uneven with the rest of the cut). **Note:** *A small amount of snipe is inevitable with all types of planers. The key is minimizing it as much as possible.*	1. One or both of the table rollers are set too high. 2. Outfeed extension slopes down or is not level with the main table. 3. Chip breaker or pressure bar set too low. 4. Workpiece is not supported as it leaves the planer.	1. Lower the table rollers (**Page 14**). 2. Shim the outfeed extension wing level with the main table. 3. Raise the height of the chip breaker (**Page 29**). 4. Hold the workpiece up slightly as it leaves the outfeed end of the planer.
Workpiece stops/slows in the middle of the cut.	1. Taking too heavy of a cut. 2. One or both of the table rollers are set too low or too high. 3. Chip breaker is set too low. 4. Feed rollers set too low or too high. 5. Table not parallel with head casting. 6. Pitch and glue build up on planer components.	1. Take a lighter cut. 2. Lower, raise, or align the table rollers (**Page 14**). 3. Raise the height of the chip breaker (**Page 29**). 4. Adjust the feed rollers to the correct height (**Page 29**) 5. Adjust the table so it is parallel to the head casting. 6. Clean the internal cutterhead components with a pitch/resin dissolving solvent.
Chipping (consistent pattern).	1. Knots or conflicting grain direction in wood. 2. Nicked or chipped knife. 3. Feeding workpiece too fast. 4. Taking too deep of a cut. 5. Misaligned chip breaker.	1. Inspect workpiece for knots and grain direction; only use clean stock. 2. Replace the damaged knife (**Page 24**), or have it sharpened. 3. Slow down the feed rate (**Page 17**). 4. Take a smaller depth of cut. (Always reduce cutting depth when surface planing or working with hard woods.) 5. Adjust both sides of the chip breaker to the correct height (**Page 27**).
Fuzzy grain.	1. Wood may have high moisture content or surface wetness. 2. Dull knives.	1. Check moisture content and allow to dry if moisture is too high. 2. Replace the knives (**Page 24**) or have them professionally sharpened.
Long lines or ridges that run along the length of the board	1. Nicked or chipped knife(s).	1. Replace the knives (**Page 24**) or have them professionally sharpened.
Uneven knife marks, wavy surface, or chatter marks across the face of the board.	1. Feeding workpiece too fast. 2. Chip breaker or pressure bar set unevenly. 3. Knives not installed evenly. 4. Worn cutterhead bearings.	1. Slow down the feed rate. 2. Adjust the height of the chip breaker (**Page 29**). 3. Adjust the knives with the knife gauge. 4. Replace cutterhead bearings.
Glossy surface.	1. Knives are dull. 2. Feed rate too slow. 3. Cutting depth too shallow.	1. Replace the knives (**Page 24**) or have them professionally sharpened. 2. Increase the feed rate (**Page 17**). 3. Increase the depth of cut.
Chip Marks (inconsistent pattern).	1. Chips aren't being properly expelled from the cutterhead.	1. Use a dust collection system; adjust the chip deflector in or out depending on your setup (**Page 31**).

Model W1742

15" PLANER

MANUAL UPDATE

This update covers changes made to the machine after the owner's manual was printed. Keep this update with your owner's manual for future reference. *If you have questions, contact Tech Support at (360) 734-3482 or by email at* ***tech_support@shopfox.biz****.*

Why the Update?

We recently re-designed the Model W1742 motor and changed the capacitor wiring. **Figure 1** shows the new motor wiring.

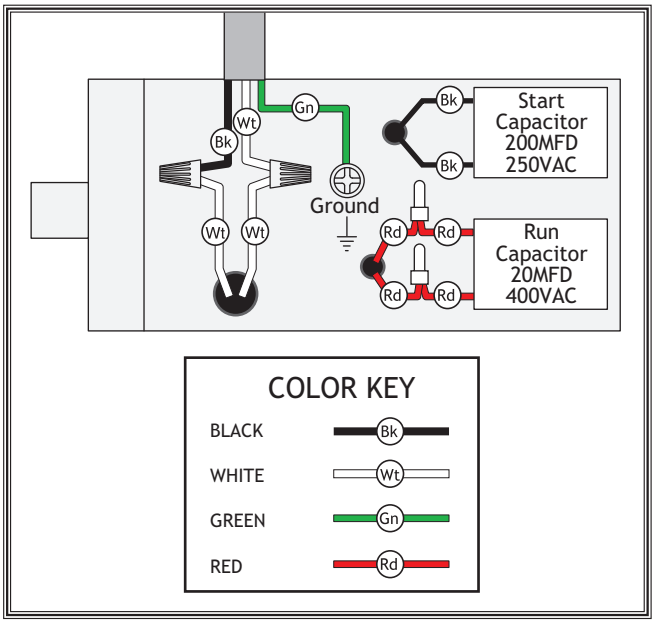

Figure 1. Model W1742 new motor and capacitor wiring.

New Parts for W1742

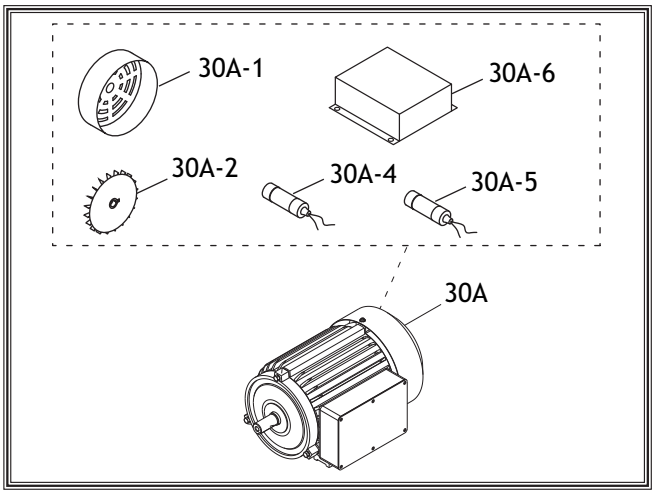

Figure 2. W1742 new motor breakdown.

REF	PART #	DESCRIPTION
30A	X1742030A	MOTOR 3HP 220V V2.03.08
30A-1	X1742030A-1	MOTOR FAN COVER V2.03.08
30A-2	X1742030A-2	MOTOR FAN V2.03.08
30A-4	X1742030A-4	R CAP 20MF 400VAC
30A-5	X1742030A-5	S CAP 200MF 250VAC
30A-6	X1742030A-6	JUNCTION BOX V2.03.08

COPYRIGHT © MARCH, 2008 BY WOODSTOCK INTERNATIONAL, INC.

WARNING: NO PORTION OF THIS MANUAL MAY BE REPRODUCED IN ANY SHAPE OR FORM WITHOUT THE WRITTEN APPROVAL OF WOODSTOCK INTERNATIONAL, INC.

#10610BL **Printed in China**

220V Single Phase Wiring Diagram

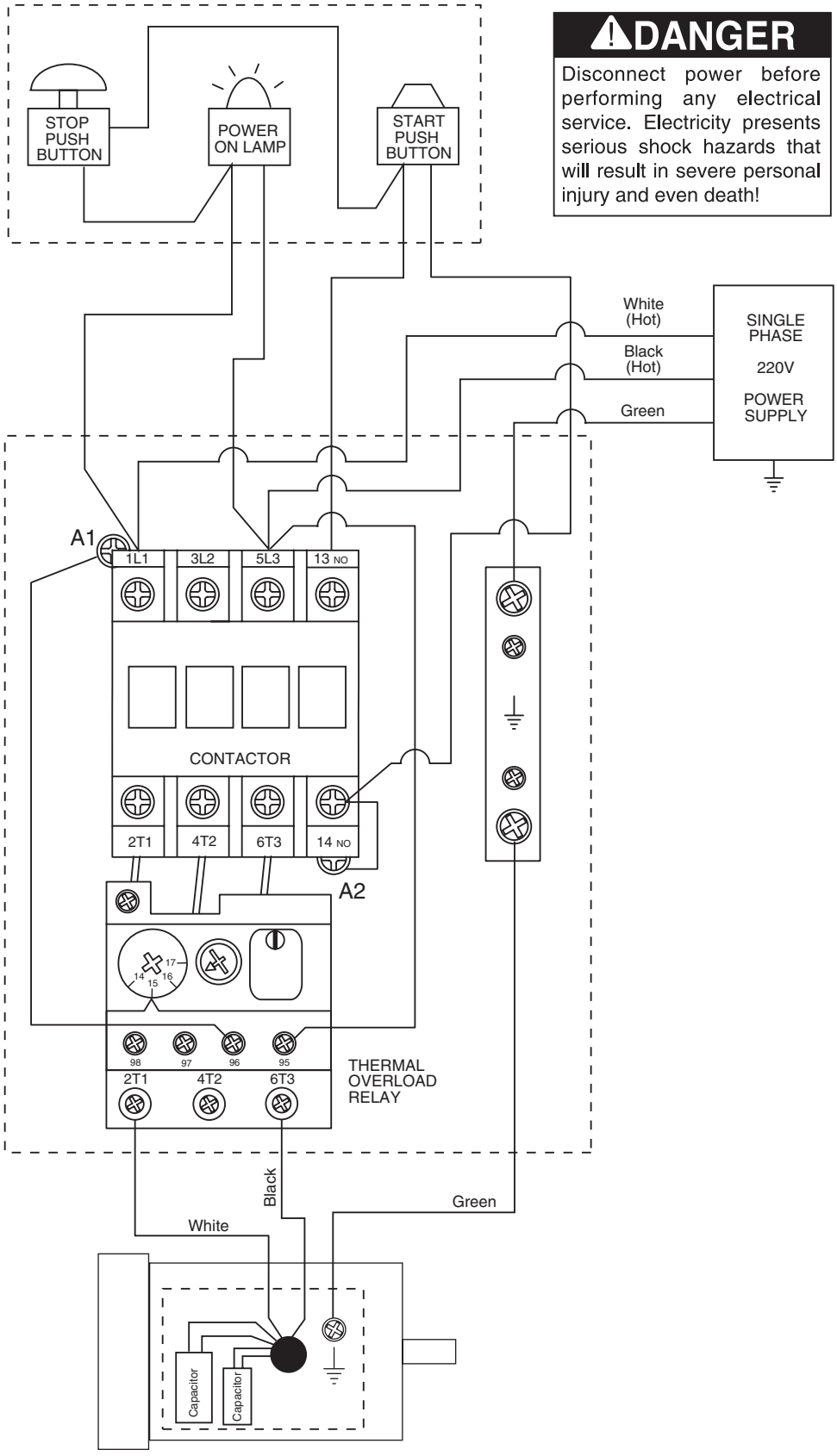

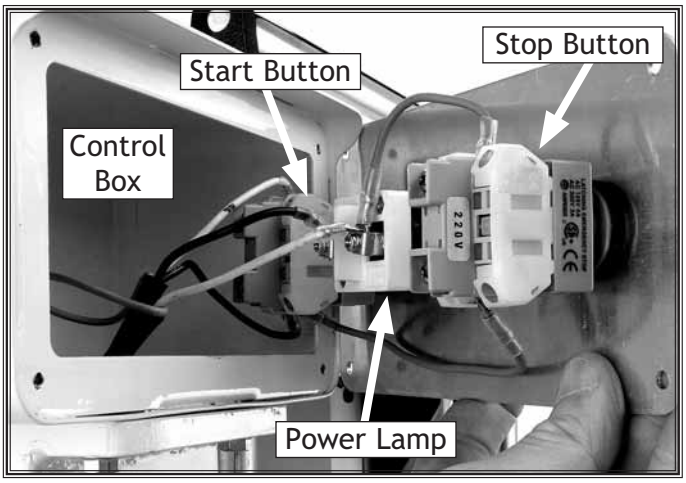
Start Button
Stop Button
Control Box
Power Lamp

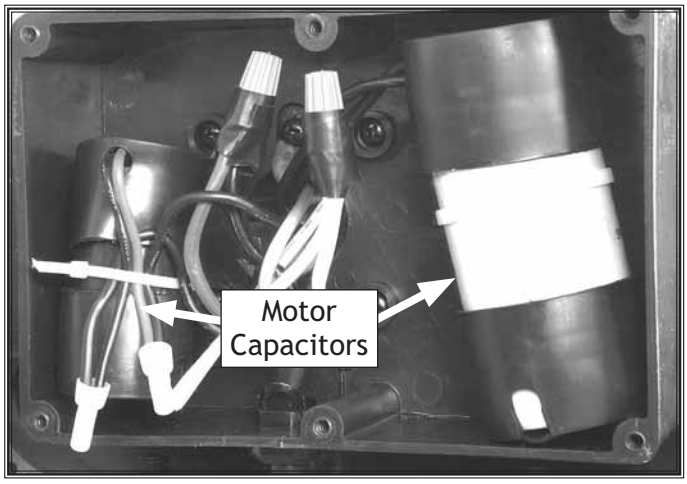
Motor Capacitors

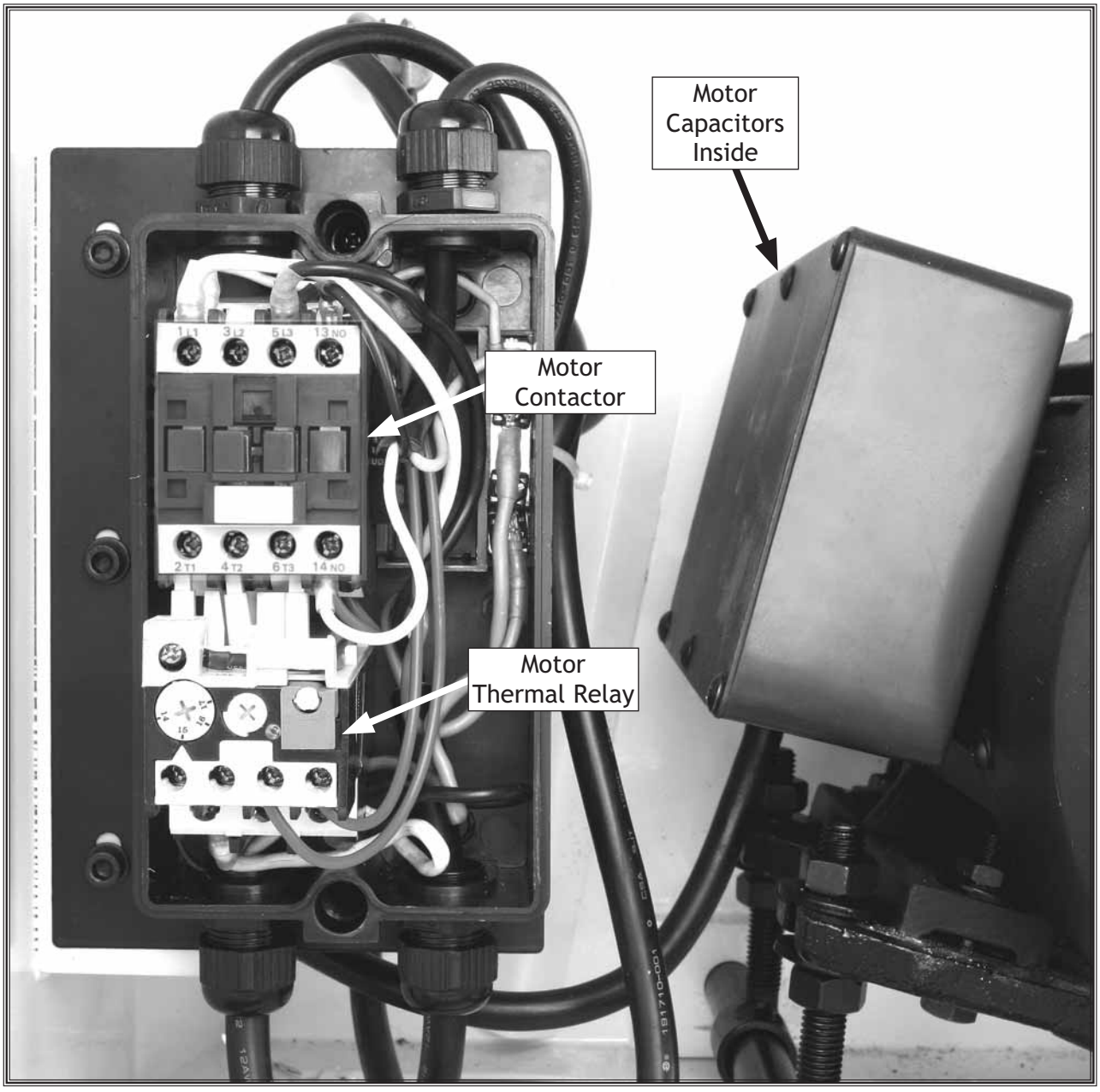
Motor Capacitors Inside
Motor Contactor
Motor Thermal Relay

PARTS

Cabinet Diagram

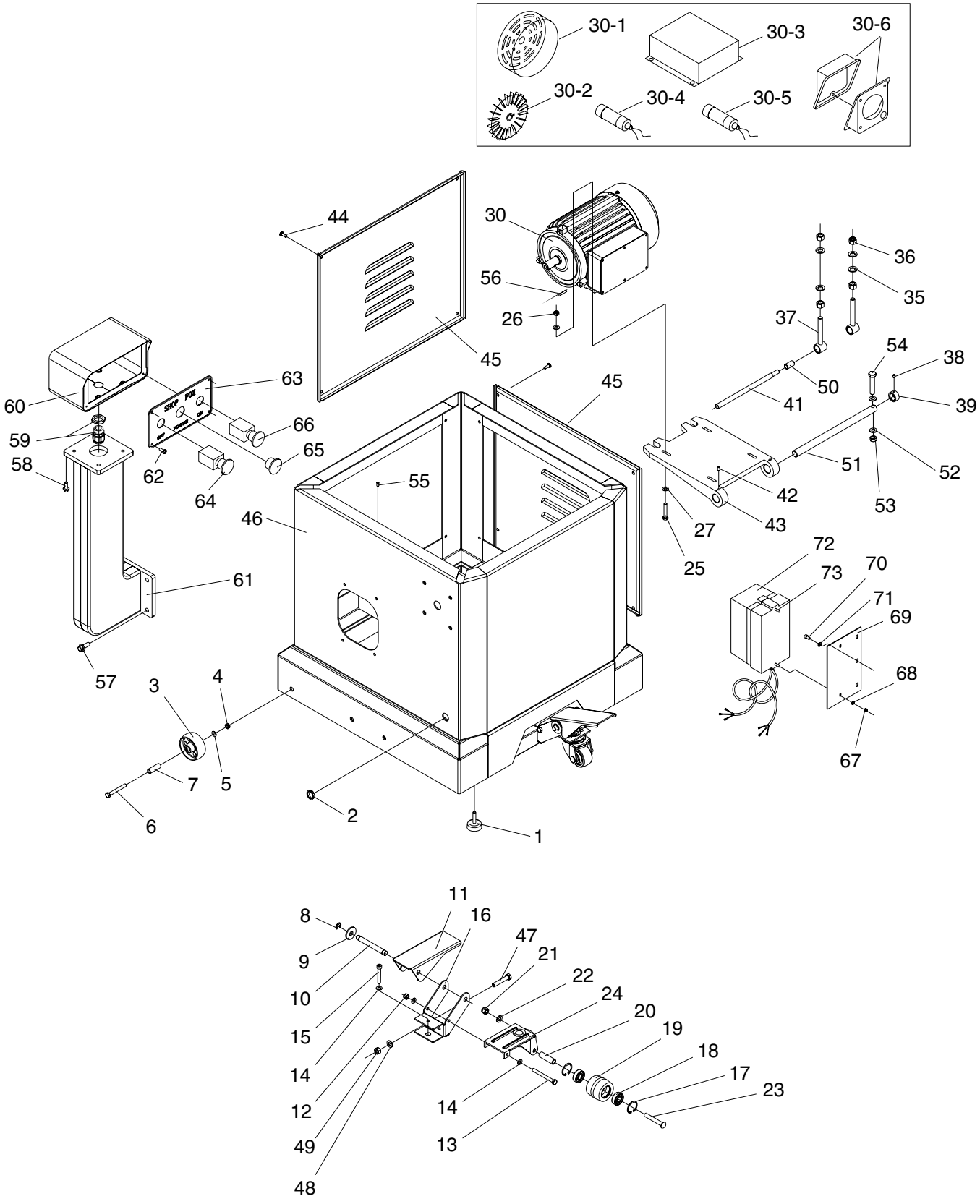

Cabinet Parts List

REF	PART #	DESCRIPTION
1	X1742001	RUBBER FEET
2	X1742002	STRAIN RELIEF
3	X1742003	UNIVERSAL PULLEY
4	XPN03M	HEX NUT M8-1.25
5	XPW01M	FLAT WASHER 8MM
6	XPB86M	HEX BOLT M8-1.25 X 65
7	X1742007	SLEEVE
8	XPR16M	EXT RETAINING RING 9MM
9	XPW06M	FLAT WASHER 12MM
10	X1742010	SHAFT 12MM
11	X1742011	PEDAL
12	XPN03M	HEX NUT M8-1.25
13	XPB45M	HEX BOLT M8-1.25 X 100
14	XPW01M	FLAT WASHER 8MM
15	XPB22M	HEX BOLT M8-1.25 X 50
16	X1742016	BRACKET
17	XPR21M	INT RETAINING RING 35MM
18	XP6202	BALL BEARING 6202
19	X1742019	TROLLEY WHEEL
20	X1742020	SLEEVE
21	XPLN09M	LOCK NUT M12-1.75
22	XPW06M	FLAT WASHER 12MM
23	X1742023	SPECIAL BOLT
24	X1742024	TROLLEY UNIVERSAL KIT
25	XPB118M	HEX BOLT M8-1.25 X 45
26	XPN03M	HEX NUT M8-1.25
27	XPW01M	FLAT WASHER 8MM
30	X1742030	MOTOR 3HP 220V
30-1	X1742030-1	MOTOR FAN COVER
30-2	X1742030-2	MOTOR FAN
30-3	X1742030-3	CAPACITOR COVER
30-4	X1742030-4	RUN CAPACITOR 20UF 250VAC
30-5	X1742030-5	START CAPACITOR 500UF 125VAC
30-6	X1742030-6	JUNCTION BOX
35	XPW06M	FLAT WASHER 12MM
36	XPN09M	HEX NUT M12-1.75

REF	PART #	DESCRIPTION
37	X1742037	ADJUST BOLT
38	XPSS03M	SET SCREW M6-1 X 8
39	X1742039	COLLAR
41	X1742041	PLATE CONNECTING ROD
42	XPSS04M	SET SCREW M6-1 X 12
43	X1742043	MOTOR PLATE
44	XPFH06M	FLAT HD SCR M6-1 X 20
45	X1742045	COVER
46	X1742046	ENCLOSED STAND
47	XPB143M	HEX BOLT M10-1.5 X 55
48	XPW04M	FLAT WASHER 10MM
49	XPN02M	HEX NUT M10-1.5
50	X1742050	BUSHING
51	X1742051	PLATE CONNECTING ROD ASSY
52	XPW04M	FLAT WASHER 10MM
53	XPN02M	HEX NUT M10-1.5
54	XPB44M	HEX BOLT M10-1.5 X 75
55	XPSS14M	SET SCREW M8-1.25 X 12
56	XPK12M	KEY 5 X 5 X 30
57	XPFB06M	HEX BOLT M8-1.25 X 20
58	XPB83M	HEX BOLT M6-1 X 16
59	X1742059	BALL STRAIN RELIEF
60	X1742060	CONTROL BOX
61	X1742061	SUPPORT ARM
62	XPHTEK6	TAP SCREW #10 X 3/8
63	X1742063	CONTROL PANEL
64	X1742064	EMERGENCY STOP BUTTON
65	X1742065	POWER LAMP
66	X1742066	ON BUTTON
67	X1742067	HEX NUT M5
68	XPW02M	FLAT WASHER 5MM
69	X1742069	PLATE
70	XPB17M	HEX BOLT M6-1X 10
71	XPW03M	FLAT WASHER 6MM
72	X1742072	MAGNETIC SWITCH ASSY
73	XPS22M	PHLP HD SCREW M5-0.8 X 25

Headstock Parts Diagram

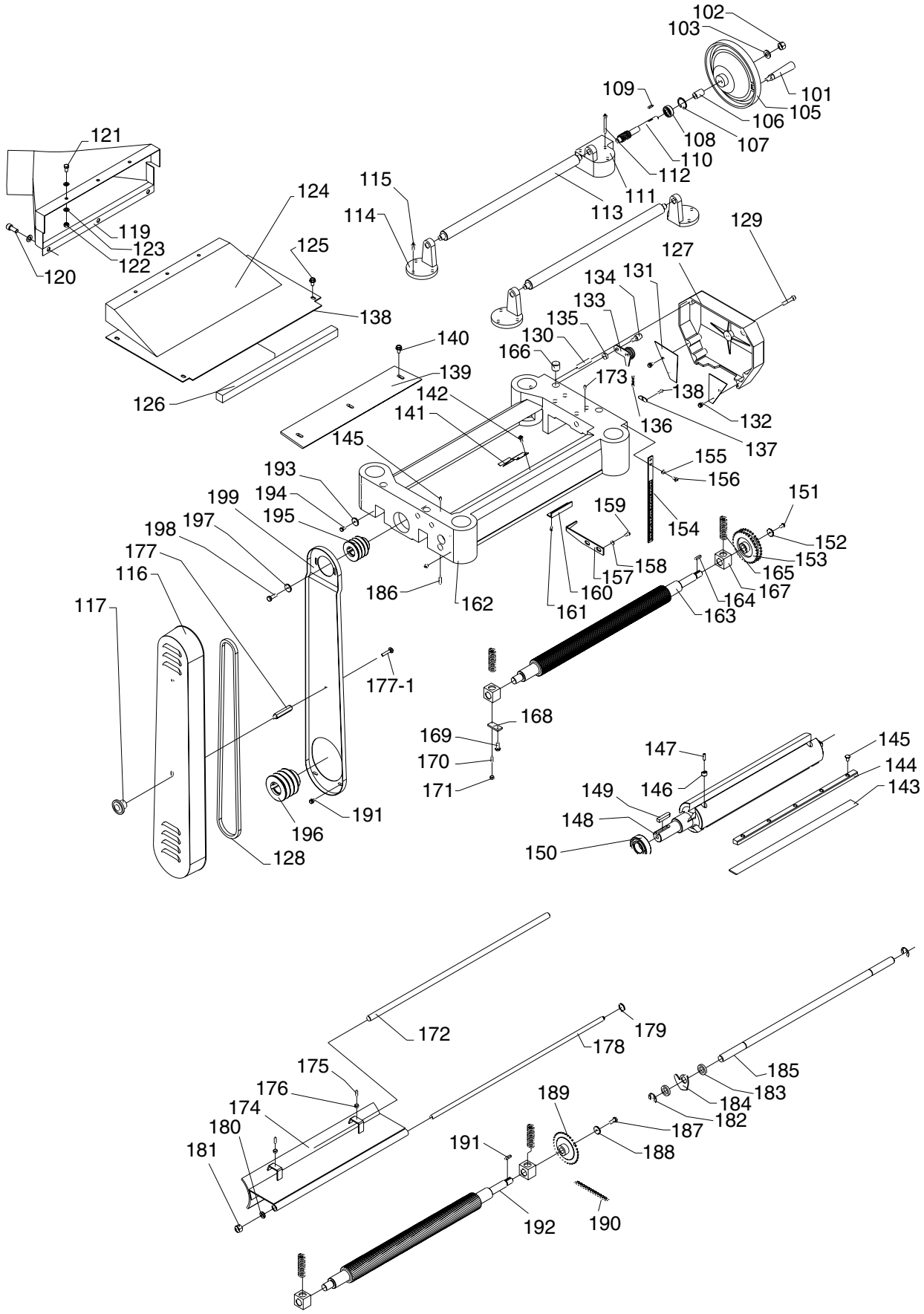

Headstock Parts List

REF	PART #	DESCRIPTION
101	X1742101	HANDLE
102	XPN09M	HEX NUT M12-1.75
103	XPW06M	FLAT WASHER 12MM
105	X1742105	HANDWHEEL
106	X1742106	COLLAR
107	XPR29M	INT RETAINIING RING 32MM
108	XP6201	BALL BEARING 6201
109	XPK48M	KEY 4 X 4 X 20
110	X1742110	WORM GEAR
111	X1742111	WORM HOUSING
112	X1742112	CAP SCREW M5-0.8 X 55
113	X1742113	ROLLER
114	X1742114	ROLLER STAND
115	XPSB52M	CAP SCREW M8-1.25 X 14
116	X1742116	BELT COVER
117	X1742117	FEMALE KNOB M8-1.25
118	XPFH02M	FLAT HD SCR M6-1 X 12
119	X1742119	DUST HOOD
120	XPSB14M	CAP SCREW M8-1.25 X 20
121	XPB04M	HEX BOLT M6-1 X 10
122	XPN01M	HEX NUT M6-1
123	XPW03M	FLAT WASHER 6MM
124	X1742124	UPPER COVER
125	XPFB01M	FLANGE BOLT M6-1 X 12
126	X1742126	FOAM
127	X1742127	GEAR BOX COVER
128	XPVMX60	V-BELT MX-60
129	XPSB45M	CAP SCREW M8-1.25 X 45
130	XPRP07M	ROLL PIN 6 X 20
131	X1742131	SAFETY HATCH
132	X1742132	FLANGE BOLT M6-1 X 10
133	X1742133	IDLE BRACKET ASSY
133-1	X1742133-1	BRACKET
133-2	X1742133-2	IDLE PULLEY
133-3	X1742133-3	IDLE SHAFT
134	X1742134	SHAFT
135	X1742135	COLLAR
136	X1742136	EXTENSION SPRING
137	X1742137	HANGER
138	XPSB68M	CAP SCREW M6-1 X 8
139	X1742139	CHIP DEFLECTOR PLATE
140	XPFB01M	FLANGE BOLT M6-1 X 12
141	X1742141	PRESS PLATE
142	XPFB01M	FLANGE BOLT M6-1 X 12
143	X1742143	KNIFE SET OF THREE
144	X1742144	GIB PLATE
145	X1742145	GIB SCREW
146	X1742146	ADJUSTING NUT
147	X1742147	JACK SCREW M5-.8 X 16
148	X1742148	CUTTERHEAD
149	XPK09M	KEY 8 X 8 X 36

REF	PART #	DESCRIPTION
150	XP6205	BALL BEARING 6205
151	XPB83M	HEX BOLT M6-1 X 16
152	XPW03M	FLAT WASHER 6MM
153	X1742153	SPROCKET
154	X1742154	SCALE
155	XPW03M	FLAT WASHER 6MM
156	XPS14M	PHLP HD SCR M6-1 X 12
157	X1742157	POINTER
158	XPW03M	FLAT WASHER 6MM
159	XPS14M	PHLP HD SCR M6-1 X 12
160	X1742160	CUT LIMIT PLATE
161	XPS03M	PHLP HD SCR M6-1 X 8
162	X1742162	HEAD CASTING
163	X1742163	OUTFEED ROLLER
164	XPK08M	KEY 5 X 5 X 16
165	X1742165	COMPRESSION SPRING
166	X1742166	SPECIAL SET SCREW
167	X1742167	BUSHING
168	X1742168	PLATE
169	XPB03M	HEX BOLT M8-1.25 X 16
170	XPSS53M	SET SCREW M5-.8 X 12
171	XPN06M	HEX NUT M5-0.8
172	X1742172	SHAFT
173	XPSS25M	SET SCREW M6-1 X 20
174	X1742174	CHIP BREAKER
175	XPSS58M	SET SCREW M6-1 X 18
176	XPN01M	HEX NUT M6-1
177	X1742177	RECEIVER PIN
177-1	XPFB01M	FLANGE BOLT M6-1 X 12
178	X1742178	LOCKING ROD
179	XPR03M	EXT RETAINING RING 12MM
180	XPLW05M	LOCK WASHER 12MM
181	XPN09M	HEX NUT M12-1.75
182	XPEC05M	E-CLIP 15MM
183	X1742183	COLLAR
184	X1742184	ANTI-KICKBACK FINGER
185	X1742185	SHAFT
186	XPSS06M	SET SCREW M8-1.25 X 16
187	XPB83M	HEX BOLT M6-1 X 16
188	XPW03M	FLAT WASHER 6MM
189	X1742189	SPROCKET
190	X1742190	CHAIN 06B-1 X 63
191	XPK08M	KEY 5 X 5 X 16
192	X1742192	INFEED ROLLER
193	XPW03M	FLAT WASHER 6MM
194	XPB02M	HEX BOLT M6-1 X 12
195	X1742195	CUTTERHEAD PULLEY
196	X1742196	MOTOR PULLEY
197	X1742197	COLLAR
198	XPB09M	HEX BOLT M8-1.25 X 20
199	X1742199	BELT GUARD

Gearbox Diagram

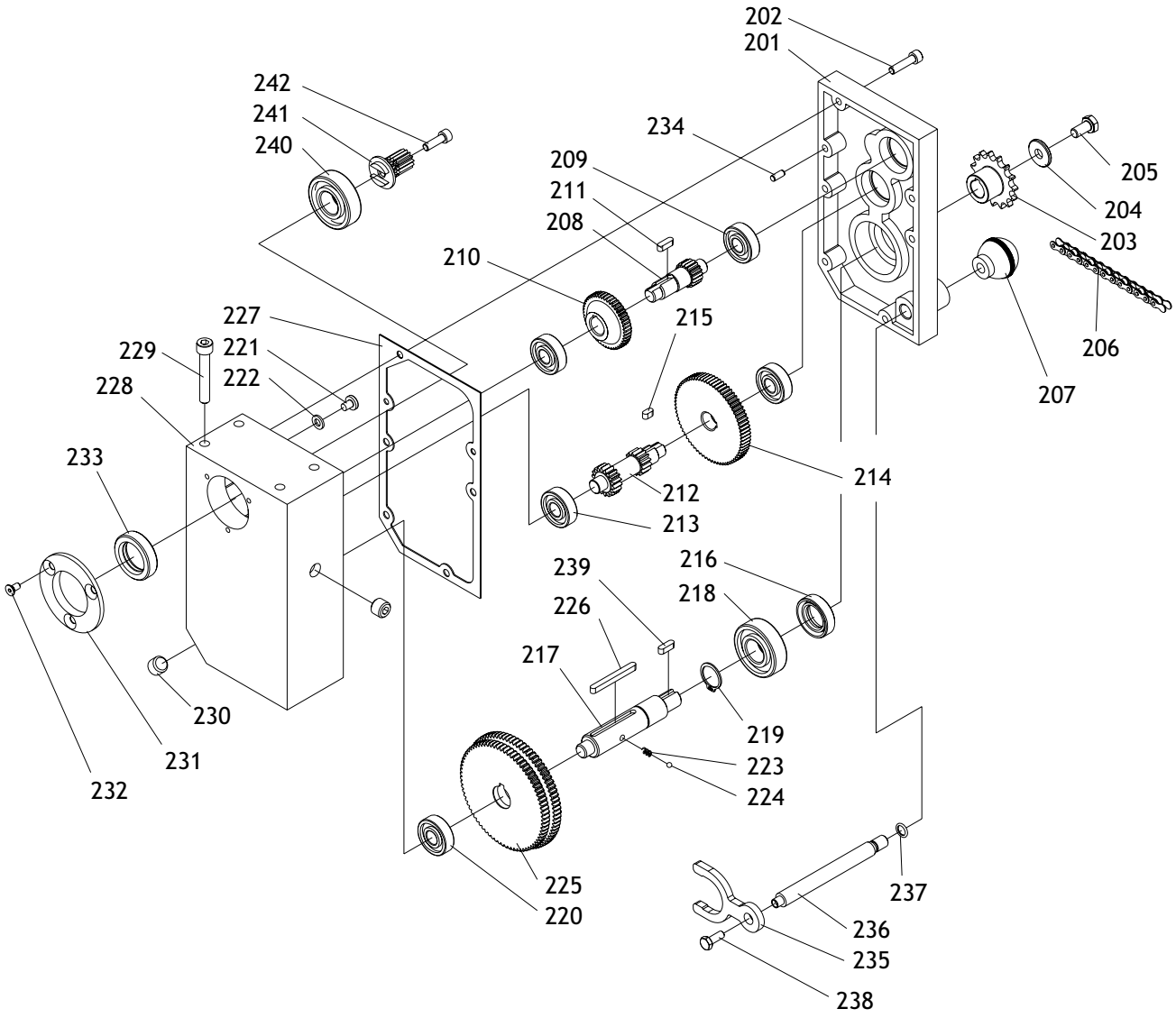

Gearbox Parts List

REF	PART #	DESCRIPTION
201	X1742201	GEAR BOX
202	XPB10M	HEX BOLT M6-1 X 25
203	X1742203	SPROCKET
204	XPW03M	FLAT WASHER 6MM
205	XPB03M	HEX BOLT M8-1.25 X 16
206	X1742206	CHAIN 06B-1 X 51
207	X1742207	FEMALE KNOB M8-1.25
208	X1742208	SHAFT
209	XP6201	BALL BEARING 6201
210	X1742210	GEAR
211	XPK19M	KEY 5 X 5 X 14
212	X1742212	SHAFT
213	XP6201	BALL BEARING 6201
214	X1742214	GEAR
215	XPK06M	KEY 5 X 5 X 10
216	X1742216	OIL SEAL 25 X 32 X X 7
217	X1742217	SHAFT
218	XP6204	BALL BEARING 6204
219	XPR09M	EXT RETAINING RING 20MM
220	XP6201	BALL BEARING 6201
221	XPS03M	PHLP HD SCR M6-1 X 8

REF	PART #	DESCRIPTION
222	XPW03M	FLAT WASHER 6MM
223	X1742223	COMPRESSION SPRING
224	X1742224	STEEL BALL 4MM
225	X1742225	GEAR
226	XPK36M	KEY 5 X 5 X 50
227	X1742227	GASKET
228	X1742228	GEAR BOX COVER
229	XPB22M	HEX BOLT M8-1.25 X 50
230	X1742230	OIL PLUG
231	X1742231	FLANGE COVER
232	XPSB33M	CAP SCREW M5-.8 X 12
233	X1742233	OIL SEAL 25 X 40 X 10
234	XPRP35M	PIN 5 X 10
235	X1742235	SHIFT FORK
236	X1742236	HANDLE SHAFT
237	X1742237	O-RING 16 X 2.4
238	XPFB01M	FLANGE BOLT M6-1 X 12
239	XPK08M	KEY 5 X 5 X 16
240	XP6204	BALL BEARING 6204
241	X1742241	GEAR
242	XPSS25M	SET SCREW M6-1 X 20

Lower Table Diagram & Parts List

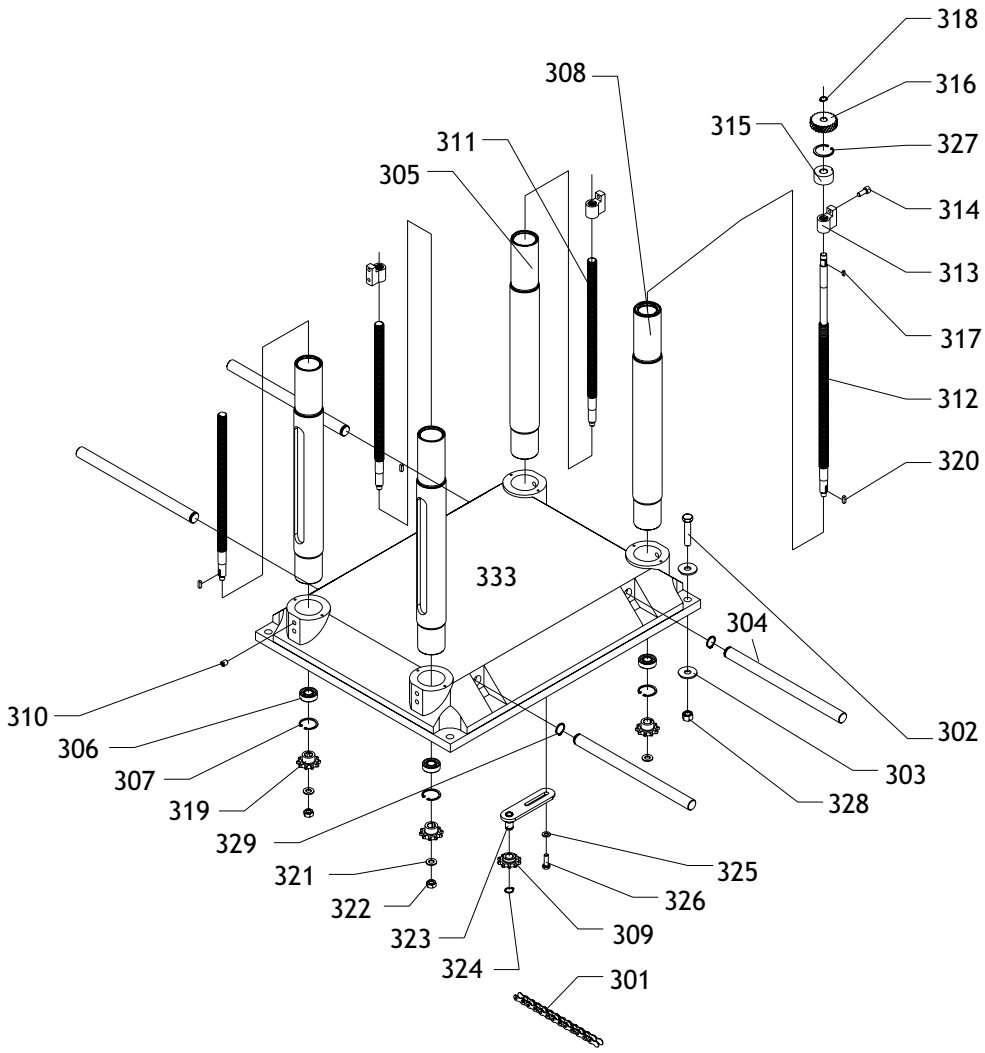

REF	PART #	DESCRIPTION
301	X1742301	CHAIN 12.7 AX 134
302	XPB24M	HEX BOLT M12-.175 X 45
303	XPW06M	FLAT WASHER 12MM
304	X1742304	LIFTING BAR
305	X1742305	COLUMN
306	XP6302	BALL BEARING 6302
307	XPR24M	INT RETAINING RING 42MM
308	X1742308	COLUMN
309	X1742309	SPROCKET
310	XPSS13M	SET SCREW M10-1.5 X 12
311	X1742311	LEAD SCREW
312	X1742312	LEAD SCREW
313	X1742313	LEAD NUT
314	XPSB02M	CAP SCREW M6-1 X 20
315	X1742315	BUSHING

REF	PART #	DESCRIPTION
316	X1742316	GEAR
317	XPK69M	KEY 4 X 4 X 12
318	XPR03M	EXT RETAINING RING 12MM
319	X1742319	SPROCKET
320	XPK08M	KEY 5 X 5 X 16
321	XPW04M	FLAT WASHER 10MM
322	XPN02M	HEX NUT M10-1.5
323	X1742323	BRACKET
324	XPR05M	EXT RETAINING RING 15MM
325	XPW01M	FLAT WASHER 8MM
326	XPB09M	HEX BOLT M8-1.25 X 20
327	XPR23M	INT RETAINING RING 40MM
328	XPN09M	HEX NUT M12-1.75
329	XPR05M	EXT RETAINING RING 15MM
333	X1742333	BASE

Upper Table Diagram & Parts List

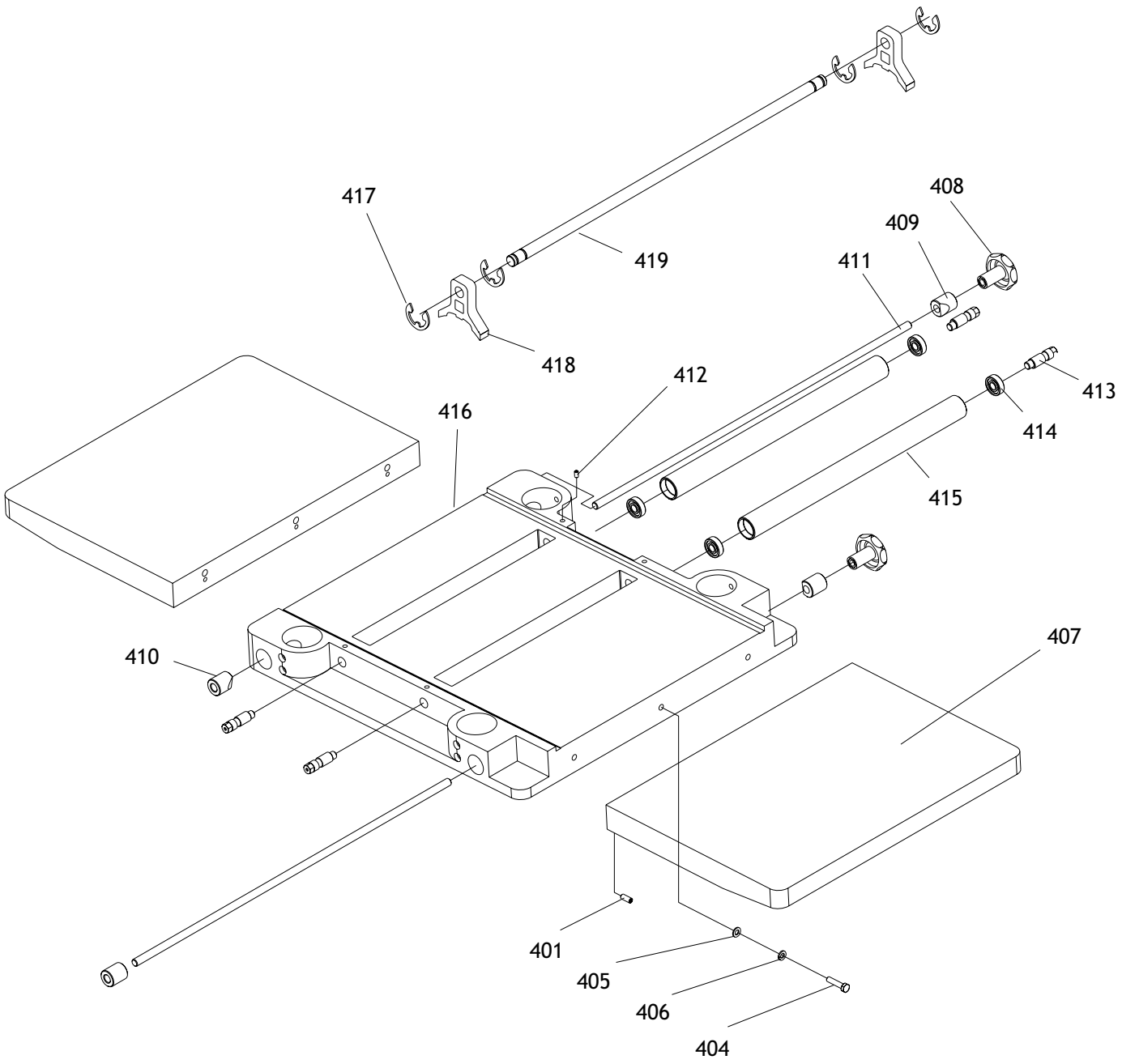

REF	PART #	DESCRIPTION
401	XPSS09M	SET SCREW M8-1.25 X 20
404	XPB26M	HEX BOLT M8-1.25 X 30
405	XPW01M	FLAT WASHER 8MM
406	XPLW04M	LOCK WASHER 8MM
407	X1742407	EXTENSION WING
408	X1742408	FEMALE KNOB M12-1.75
409	X1742409	WEDGE DOG
410	X1742410	GIB
411	X1742411	LOCK BAR

REF	PART #	DESCRIPTION
412	XPSS11M	SET SCREW M6-1 X 16
413	X1742413	ECCENTRIC SHAFT
414	XP6203	BALL BEARING 6203
415	X1742415	ROLLER
416	X1742416	TABLE/BED
417	XPR39M	EXT RETAINING RING 8MM
418	X1742418	SADDLE
419	X1742419	ROD

Label Placement

⚠WARNING

Safety labels warn about machine hazards and ways to prevent injury. The owner of this machine MUST maintain the original location and readability of the labels on the machine. If any label is removed or becomes unreadable, REPLACE that label before using the machine again. Contact Woodstock International, Inc. at (360) 734-3482 or www.shopfoxtools.com to order new labels.

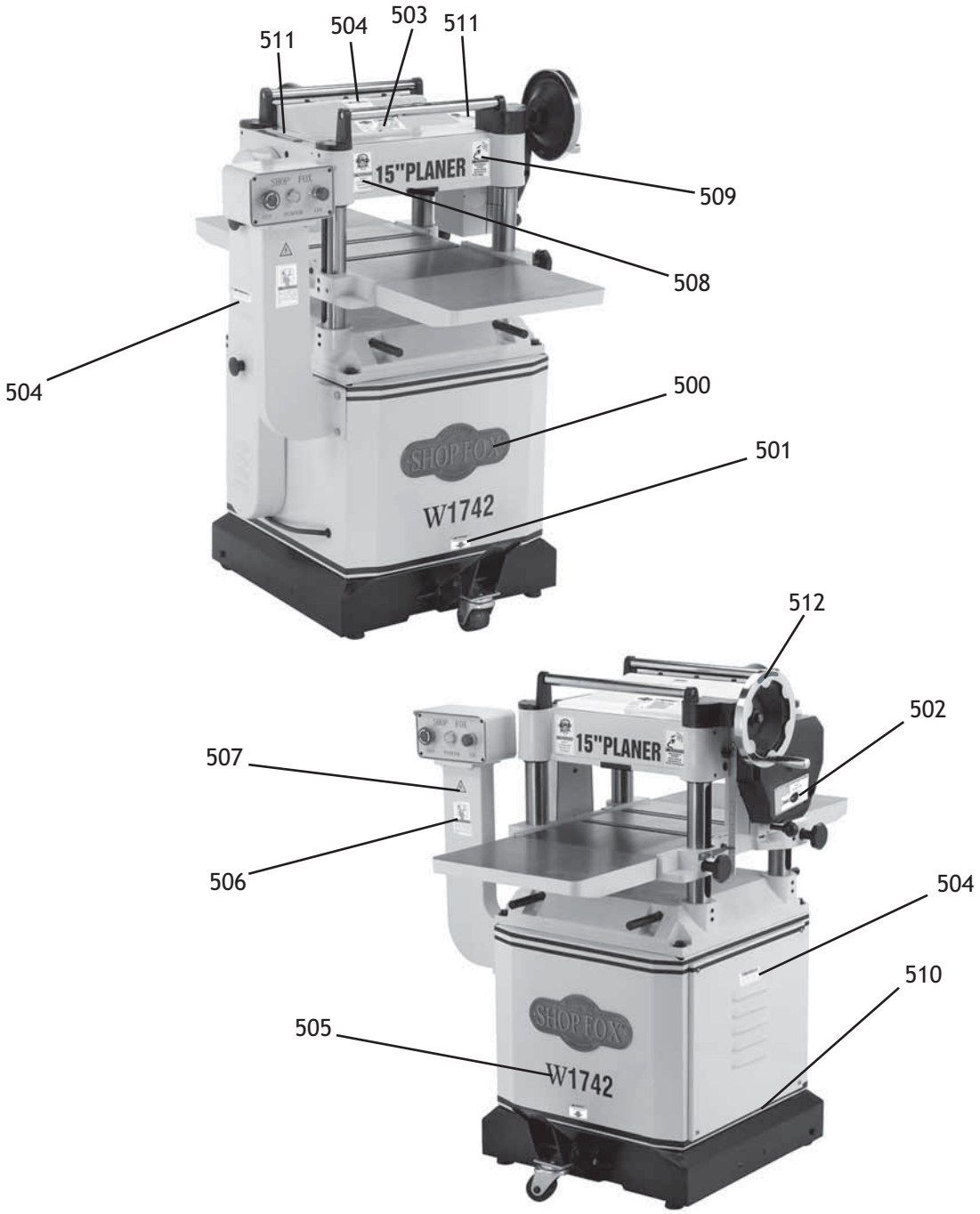

Label List

REF	PART #	DESCRIPTION
500	X1742500	SHOP FOX LOGO PLATE
501	X1742501	LOCK BASE LABEL
502	X1742502	SHIFT GEARS LABEL
503	X1742503	DATA LABEL
504	X1742504	KEEP CLOSED LABEL
505	X1742505	W1742 LABEL
506	X1742506	READ MANUAL LABEL

REF	PART #	DESCRIPTION
507	X1742507	ELECTRICTY LABEL
508	X1742508	DUST/EYE WARNING LABEL
509	X1742509	UNPLUG LABEL
510	X1742510	PINSTRIPE TAPE
511	X1742511	OIL HERE LABEL
512	X1742512	ROTATION LABEL

Warranty

Woodstock International, Inc. warrants all **SHOP FOX®** machinery to be free of defects from workmanship and materials for a period of two years from the date of original purchase by the original owner. This warranty does not apply to defects due directly or indirectly to misuse, abuse, negligence or accidents, lack of maintenance, or reimbursement of third party expenses incurred.

Woodstock International, Inc. will repair or replace, at its expense and at its option, the **SHOP FOX®** machine or machine part which in normal use has proven to be defective, provided that the original owner returns the product prepaid to the **SHOP FOX®** factory service center or authorized repair facility designated by our Bellingham, WA office, with proof of their purchase of the product within two years, and provides Woodstock International, Inc. reasonable opportunity to verify the alleged defect through inspection. If it is determined there is no defect, or that the defect resulted from causes not within the scope of Woodstock International Inc.'s warranty, then the original owner must bear the cost of storing and returning the product.

This is Woodstock International, Inc.'s sole written warranty and any and all warranties that may be implied by law, including any merchantability or fitness, for any particular purpose, are hereby limited to the duration of this written warranty. We do not warrant that **SHOP FOX®** machinery complies with the provisions of any law or acts. In no event shall Woodstock International, Inc.'s liability under this warranty exceed the purchase price paid for the product, and any legal actions brought against Woodstock International, Inc. shall be tried in the State of Washington, County of Whatcom. We shall in no event be liable for death, injuries to persons or property or for incidental, contingent, special or consequential damages arising from the use of our products.

Every effort has been made to ensure that all **SHOP FOX®** machinery meets high quality and durability standards. We reserve the right to change specifications at any time because of our commitment to continuously improve the quality of our products.

Warranty Registration

Name_____

Street _____

City _____ State_____ Zip_____

Phone #_____ Email _____ Invoice #_____

Model #_____ Serial #_____ Dealer Name_____ Purchase Date_____

The following information is given on a voluntary basis. It will be used for marketing purposes to help us develop better products and services. ***Of course, all information is strictly confidential.***

1. How did you learn about us?

_____ Advertisement ____ Friend ____ Local Store
_____ Mail Order Catalog ____ Website ____ Other:

2. How long have you been a woodworker/metalworker?

_____ 0-2 Years _____ 2-8 Years ____ 8-20 Years _____ 20+ Years

3. How many of your machines or tools are **Shop Fox®**?

_____ 0-2 _____ 3-5 ____ 6-9 _____ 10+

4. Do you think your machine represents a good value? _____ Yes ____ No

5. Would you recommend **Shop Fox®** products to a friend? _____ Yes ____ No

6. What is your age group?

_____ 20-29 ____ 30-39 ____ 40-49
_____ 50-59 ____ 60-69 ____ 70+

7. What is your annual household income?

_____ $20,000-$29,000 ____ $30,000-$39,000 ____ $40,000-$49,000
_____ $50,000-$59,000 ____ $60,000-$69,000 ____ $70,000+

8. Which of the following magazines do you subscribe to?

____ Cabinet Maker
____ Family Handyman
____ Hand Loader
____ Handy
____ Home Shop Machinist
____ Journal of Light Cont.
____ Live Steam
____ Model Airplane News
____ Modeltec
____ Old House Journal
____ Popular Mechanics
____ Popular Science
____ Popular Woodworking
____ Practical Homeowner
____ Precision Shooter
____ Projects in Metal
____ RC Modeler
____ Rifle
____ Shop Notes
____ Shotgun News
____ Today's Homeowner
____ Wood
____ Wooden Boat
____ Woodshop News
____ Woodsmith
____ Woodwork
____ Woodworker West
____ Woodworker's Journal
____ Other:

9. Comments:_____

_____

_____

_____

CUT ALONG DOTTED LINE

FOLD ALONG DOTTED LINE

Place
Stamp
Here

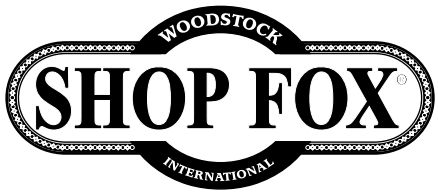

WOODSTOCK INTERNATIONAL INC.
P.O. BOX 2309
BELLINGHAM, WA 98227-2309

FOLD ALONG DOTTED LINE

TAPE ALONG EDGES--PLEASE DO NOT STAPLE